zenith

SERVICE MANUAL

Product Type:	Color TV /VCR Combo
Chassis:	CC-002
Manual Series:	CM152
Manual Part #:	923-03440
Model Line:	C
Product Year:	2000

Model Series:

TVBR1342Z
TVBR1942Z
TVBR2542Z

CONTENTS

General Information 1
Servicing 2
Parts 3
Exploded views 4
Schematics 5

Published by Technical Publications
Zenith Electronics Corporation
201 James Record Road - Huntsville, Alabama 35824-1513

Printed in U.S.A.
CN DG 5k

May 2000

PRODUCT SAFETY SERVICING GUIDELINES FOR AUDIO-VIDEO PRODUCTS

IMPORTANT SAFETY NOTICE

This manual was prepared for use only by properly trained audio-visual service technicians.

When servicing this product, under no circumstances should the original design be modified or altered without permission from Zenith Electronics Corporation. All components should be replaced only with types identical to those in the original circuit and their physical location, wiring and lead dress must conform to original layout upon completion of repairs.

Special components are also used to prevent x-radiation, shock and fire hazard. These components are indicated by the letter "x" included in their component designators and are required to maintain safe performance. No deviations are allowed without prior approval by Zenith Electronics Corporation.

Circuit diagrams may occasionally differ from the actual circuit used. This way, implementation of the latest safety and performance improvement changes into the set is not delayed until the new service literature is printed.

Caution: Do not attempt to modify this product in any way. Never perform customized installations without manufacturer's approval. Unauthorized modifications will not only void the warranty, but may lead to property damage or user injury.

Service work should be performed only after you are thoroughly familiar with these safety checks and servicing guidelines.

Graphic symbols

The exclamation point within an equilateral triangle is intended to alert the service personnel to important safety information in the service literature.

The lightning flash with arrowhead symbol within an equilateral triangle is intended to alert the service personnel to the presence of noninsulated "dangerous voltage" that may be of sufficient magnitude to constitute a risk of electric shock.

The pictorial representation of a fuse and its rating within an equilateral triangle is intended to convey to the service personnel the following fuse replacement caution notice:
CAUTION: FOR CONTINUED PROTECTION AGAINST RISK OF FIRE, REPLACE ALL FUSES WITH THE SAME TYPE AND RATING AS MARKED NEAR EACH FUSE.

SERVICE INFORMATION

While servicing, use an isolation transformer for protection from AC line shock. After the original service problem has been corrected, make a check of the following:

FIRE AND SHOCK HAZARD

1. Be sure that all components are positioned to avoid a possibility of adjacent component shorts. This is especially important on items transported to and from the repair shop.
2. Verify that all protective devices such as insulators, barriers, covers, shields, strain reliefs, power supply cords, and other hardware have been reinstalled per the original design. Be sure that the safety purpose of the polarized line plug has not been defeated.
3. Soldering must be inspected to discover possible cold solder joints, solder splashes, or sharp solder points. Be certain to remove all loose foreign particles.
4. Check for physical evidence of damage or deterioration to parts and components, for frayed leads or damaged insulation (including the AC cord), and replace if necessary.
5. No lead or component should touch a receiving tube or a resistor rated at 1 watt or more. Lead tension around protruding metal surfaces must be avoided.
6. After re-assembly of the set, always perform an AC leakage test on all exposed metallic parts of the cabinet (the channel selector knobs, antenna terminals, handle and screws) to be sure that set is safe to operate without danger of electrical shock. DO NOT USE A LINE ISOLATION TRANSFORMER DURING THIS TEST. Use an AC voltmeter having 5000 ohms per volt or more sensitivity in the following manner: Connect a 1500 ohm, 10 watt resistor, paralleled by a .15 mfd 150V AC type capacitor between a known good earth ground water pipe, conduit, etc.) and the exposed metallic parts, one at a time. Measure the AC voltage across the combination of 1500 ohm resistor and .15 mfd capacitor. Reverse the AC plug by using a non-polarized adaptor and repeat AC voltage measurements for each exposed metallic part. Voltage measured must not exceed 0.75 volts RMS. This corresponds to 0.5 milliamp AC. Any value exceeding this limit constitutes a potential shock hazard and must be corrected immediately.

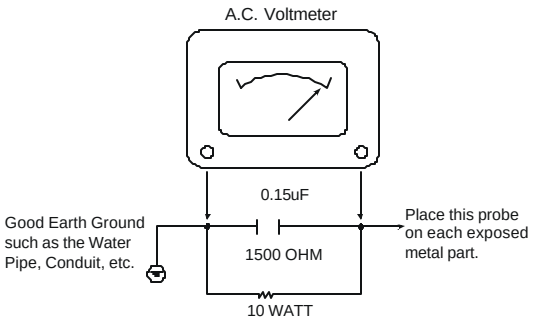

X-RADIATION

1. Be sure procedures and instructions to all service personnel cover the subject of x-radiation. The only potential source of x-rays in current TV receivers is the picture tube. However, this tube does not emit x-rays when the HV is at the factory-specified level. The proper value is given in the applicable schematic. Operation at higher voltages may cause a failure of the picture tube or high-voltage supply and, under certain circumstances may produce radiation in excess of desirable levels.
2. Only factory-specified CRT anode connectors must be used.
3. It is essential that the service personnel have available an accurate and reliable high-voltage meter.
4. When the high-voltage circuitry is operating properly, there is no possibility of an x-radiation problem. Every time a color chassis is serviced, the brightness should be run up and down while monitoring the high voltage with a meter, to be certain that the high voltage does not exceed the specified value and that it is regulating correctly.
5. When troubleshooting and making test measurements in a product with a problem of excessively high voltage, avoid being unnecessarily close to the picture tube and the high voltage power supply. Do not operate the product longer than necessary to locate the cause of excessive voltage.
6. Refer to HV, B+, and shutdown adjustment procedures described in the appropriate schematics and diagrams (where used).

IMPLOSION

1. All direct view picture tubes are equipped with an integral implosion protection system; take care to avoid damage during installation.
2. Use only the recommended factory replacement tubes.

TIPS ON PROPER INSTALLATION

1. Never install any receiver in a closed-in recess, cubbyhole, or closely fitting shelf space over, or close to, a heat duct, or in the path of heated air flow.
2. Avoid conditions of high humidity such as: outdoor patio installations where dew is a factor, near steam radiators where steam leakage is a factor, etc.
3. Avoid placement where draperies may obstruct venting. The customer should also avoid the use of decorative scarves or other coverings that might obstruct ventilation.
4. Wall- and shelf-mounted installations using a commercial mounting kit must follow the factory-approved mounting instructions. A product mounted to a shelf or platform must retain its original feet (or the equivalent thickness in spacers) to provide adequate air flow across the bottom. Bolts or screws used for fasteners must not touch any parts or wiring. Perform leakage tests on customized installations.
5. Caution customers against mounting a product on a sloping shelf or in a tilted position, unless the receiver is properly secured.
6. A product on a roll-about cart should be stable in its mounting to the cart. Caution the customer on the hazards of trying to roll a cart with small casters across thresholds or deep pile carpets.
7. Caution customers against using a cart or stand that has not been listed by Underwriters Laboratories, Inc. for use with its specific model of television receiver or generically approved for use with TVs of the same or larger screen size.
8. Caution customers against using extension cords. Explain that a forest of extensions, sprouting from a single outlet, can lead to disastrous consequences to home and family.

SERVICING GUIDELINES FOR X-RADIATION PROTECTION

X-RAY PROTECTION CIRCUIT DESCRIPTION

If the High Voltage on Anode off (FB401) F.B.T. is increased, the Heater voltage will increase at the same time. The voltage from Heater is rectified by D412, and then the dc voltage is divided by R420 and R442. At normal operation, the voltage V1 on pin 85 of IC-I1001 is 5.9V. If HV exceeds its safety level, Q1023 is switched on, resulting in V1 loss on pin 85 this in turn causes a loss of horizontal drive to q405, thereby shutting down the unit, activating H.V. Shut Down. The X-Ray protect line also monitors the B+ line via D408 which is fed by a voltage divider circuit consisting of R441,R440 and R439.

CRT ANODE HIGH VOLTAGE MEASUREMENT PROCEDURE

Each screen size has its own safe Anode Voltage and shutdown voltage. Critical Safety Components (designated with shading in the component parts list) are designed to operate the CRT at a safe operating Anode voltage and provide proper shutdown thresholds. If replacement of any of these components are deemed necessary, it is important to use original Zenith replacement components. After replacement is made, confirm proper Anode Voltage using the following procedure.

Measurement of the CRT Anode Voltage must be performed using a high impedance high voltage meter, with no visible raster on the screen, and operating at nominal horizontal scanning frequency. Connect a strong broadcast signal (or TV signal generator operating at 15.734kHz horizontal scanning rate) to the RF input.

After the CRT is discharged, connect a high impedance high voltage meter at the distribution point. Turn the television on and confirm a good signal is being displayed. Reduce Brightness and Contrast settings until the picture is well extinguished.

Observe the Anode Voltage meter reading and compare with the table below. If the voltage reading is higher than the maximum, verify circuit component values and proper operation.

SCREEN SIZE	B+ VDC (0 BEAM)	HV NOM KV	HV MAX KV
COMPONENT LEVEL REPAIR			
13	128.5+/-2%	26kv	29kv
19	128.5+/-2%	28kv	33kv
25	128.5+/-2%	31.5kv	34kv

EQUIPMENT REQUIRED

a) Video Generator
b) HV DC meter (0 to 40kv, high Z)

TEST PROCEDURE

To verify the Shutdown Circuit is working properly, proceed with the following procedure.

1. Istall a 100K ohm variable resistor across R529.
2. Turn the unit on and set the input A.C. Voltage to 130VAC.
3. Adjust the variable resistor from maximum to minimum. During this adjustment monitor the anode voltage to the C.R.T. this voltage should not exceed the maximum H.V. listed in the chart above. If this voltage exceeds the maximum H.V. for the size C.R.T. listed, the X-Ray protect circuit is not working properly and must be repaired prior to returning the unit to the customer.

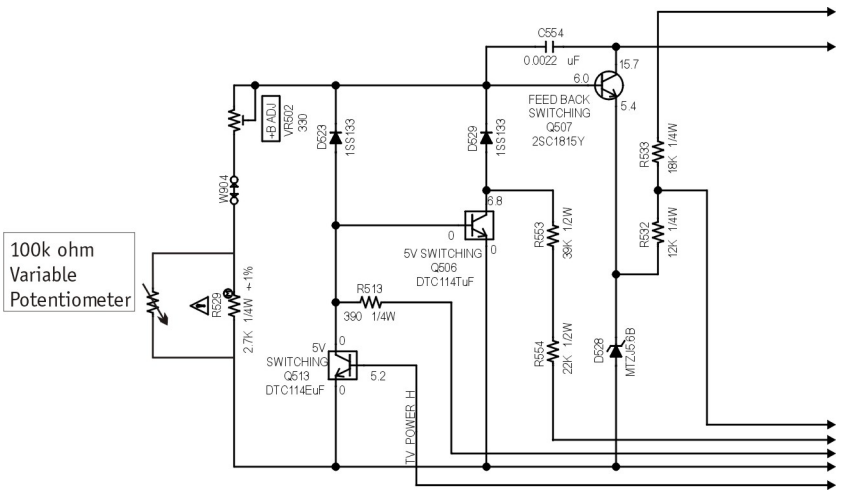

TABLE OF CONTENTS

SECTION 1 GENERAL INFO / REMOTE CONTROL

SPECIFICATIONS 1-1

SECTION 2 SERVICING

DISASSEMBLY INSTRUCTION 2-1
REMOVAL OF MECHANICAL PARTS AND PC BOARDS 2-1
REMOVAL OF DECK PARTS 2-5
REMOVAL OF ANODE CAP 2-10
KEY ABBREVIATIONS 2-12
SERVICE MODE 2-14
PREVENTIVE CHECKS AND SERVICE INTERVALS 2-15
NOTE FOR REPLACING OF MEMORY IC 2-17
SERVICING FIXTURES AND TOOLS 2-19
PREPARATION FOR SERVICING 2-20
MECHANICAL ADJUSTMENTS 2-21
ELECTRICAL ADJUSTMENTS 2-25

SECTION 3 PARTS LIST

COMPONENT PARTS LIST 3-1

SECTION 4 EXPLODED VIEW

13/19" MECHANICAL EXPLODED VIEW 4-1
25” MECHANICAL EXPLODED VIEW 4-2
13/19" CHASSIS EXPLODED VIEW 4-3
25” CHASSIS EXPLODED VIEW 4-4
13/19/25" UPPER DECK EXPLODED VIEW 4-5
13/19/25" LOWER DECK EXPLODED VIEW 4-5

SECTION 5 SCHEMATIC

13/19" POWER SUPPLY CIRCUIT 5-1
13/19" Interconnect Diagram 5-1
13/19" Main Micro Block Diagram 5-2
13/19" Audio Block Diagram 5-3
13/19" Video Block Diagram 5-4
25" Interconnect Diagram 5-5
25" Main IC Block Diagram 5-6
25" Audio IC Block Diagram 5-7
25" Video IC Block Diagram 5-8
13/19" Primary Power Circuit 5-9
13/19" Deflection Circuit 5-10
13/19" Main Microprocessor Circuit 5-11
13/19" Chroma Circuit 5-12
13/19" Head Amp Circuit 5-13
13/19" Audio Amp Circuit 5-14
13/19" CRT Circuit 5-15
13/19" Deck Circuit 5-16
13/19" Input/Output Circuit 5-17
13/19" Control Panel Circuit 5-18
25" Primary Power Circuit 5-19
25” Deflection Circuit 5-20
25" Main Micro Circuit 5-21
25" Chroma Circuit 5-22
25" Head Amp Circuit 5-23
25" Audio Amp Circuit 5-24
25" CRT Circuit 5-25
25" Deck Circuit 5-26
25" Input/Output Circuit 5-27
25" Control Panel Circuit 5-28
13/19" Main PCB Top Layout 5-29
13/19" Main PCB Bottom Layout 5-30
13/19" Control Panel & Deck PCB Layout 5-31
25" Main PCB Layout 5-32
25" System Control PCB Top Layout 5-33

SPECIFICATIONS
(TV SECTION)

PICTURE SIZE:	
	13 INCH TVBR1342Z
	19 INCH TVBR1942Z
	25 INCH TVBR2542Z
SYSTEM:	NTSC
FREQUENCY:	
VHF:	2-13 ch
UHF:	14-69 ch
CATV:	14-36 (A) – (W) ch
	37-59 (AA) – (WW) ch
	60-85 (AAA) – (ZZZ) ch
	86-94 (86) – (94) ch
	95-99 (A-5) – (A-1) ch
	100-125 (100) – (125) ch
	01 (5A) ch
INTERMEDIATE FREQUENCY	
Picture IF Carrier Frequency:	45.75 MHz
Sound IF Carrier Frequency:	41.25 MHz
SOUND INTERMEDIATE FREQUENCY:	4.5 MHz
MAXIUM OUTPUT POWER:	1.5W (Model TVBR1342Z)
	1.5W (Models TVBR1942Z)
	2.5W (Models TVBR2542Z)
SPEAKER:	8 ohm (Models TVBR1342Z, TVBR1942Z)
	16 ohm x 2 (Models TVBR2542Z)
POWER SOURCE:	AC 120V, 60Hz (All Models)
POWER CONSUMPTION:	70W (Models TVBR1342Z)
	86W (Models TVBR1942Z)
	120W (Models TVBR2542Z)

SPECIFICATIONS

(VCR SECTION)

OPERATING TEMPATURE:		5°C to 40°C
STORAGE TEMPATURE:		-20°C to 60°C
VIDEO RECORDING SYSTEM:		VHS, 2 head rotary heads helical scanning system Luminance: FM azimuth recording Color Signal: Low frequency converted direct recording
HEADS:		
	Video:	2 Head (Models TVBR1342Z. TVBR1942Z, TVBR2542Z)
	Audio/Control:	1 Stationary Head
	Erase:	1 Full Track Erase
TAPE WIDTH:		12.65mm high density
AUDIO TRACK:		1 Track
F.FWD TIME:		Approx. 3'40" (with T-120 cassette)
REW TIME:		Approx. 2'50" (with T-120 cassette)
TAPE SPEED:		SP: 33.35mm/sec LP: 16.67mm/sec SLP: 11.12 mm/sec
INPUT LEVEL:		Video: 1.0Vp-p, 75ohm unbalanced Audio: 300mV, 50k ohm unbalanced
OUTPUT LEVEL:		Video: 1.0Vp-p, 75ohm unbalanced Audio: 300mV, 1k ohm unbalanced
WEIGHT:		27.6 lbs. (Models TVBR1342Z) 48.7 lbs. (Models TVBR1942Z) 67.1 lbs. (Models TVBR2542Z)
DIMENSION:		14.48"(W) x 14.8"(D) x 15.28"(H) (Model TVBR1342Z) 19.56"(W) x 18.5"(D) x 19.18"(H) (Model TVBR1942Z) 24.72"(W) x 19.8"(D) x 24.2"(H) (Models TVBR2542Z)

TVBR 13/1942Z DISASSEMBLY INSTRUCTIONS

1. REMOVAL OF MECHANICAL PARTS AND P.C. BOARDS

1-1: BACK CABINET (Refer to Fig. 1-1)

1. Remove the 6 screws ①.
2. Remove the screw ② which is used for holding the Back Cabinet. (2 Screws on the back of TVBR 2542Z)
3. Remove the AC cord from the AC cord hook ③.
4. Remove the Back Cabinet in the direction of arrow.

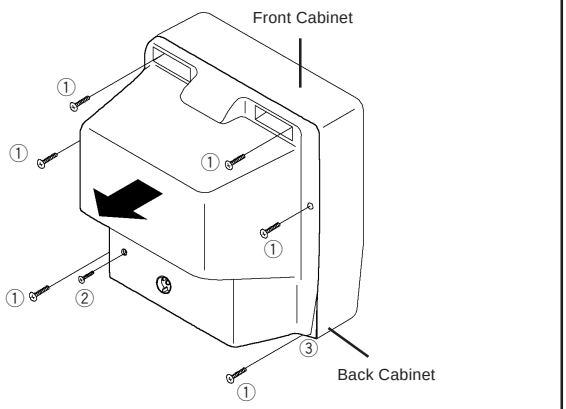

Fig. 1-1

1-2: CRT PCB (Refer to Fig. 1-2)

CAUTION: BEFORE REMOVING THE ANODE CAP, DISCHARGE ELECTRICITY BECAUSE IT CONTAINS HIGH VOLTAGE. BEFORE ATTEMPTING TO REMOVE OR REPAIR ANY PCB, UNPLUG THE POWER CORD FROM THE AC SOURCE.

1. Remove the Anode Cap. (Refer to REMOVAL OF ANODE CAP)
2. Disconnect the following connector: (CP801).
3. Remove the CRT PCB in the direction of arrow.

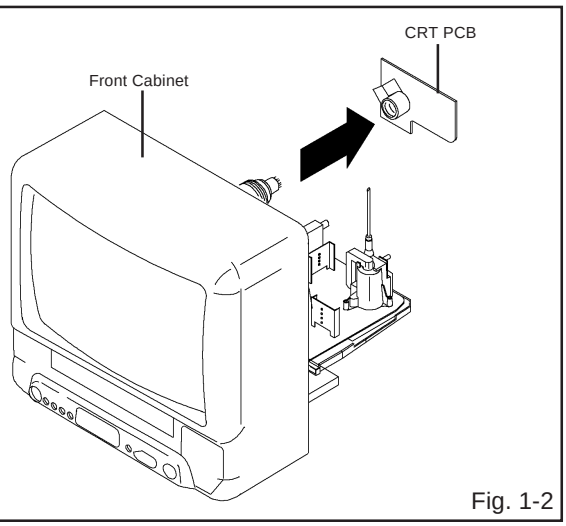

Fig. 1-2

1-3: VCR BLOCK (Refer to Fig. 1-3)

1. Remove the 2 screws ①.
2. Disconnect the following connectors: (CP757, CP353, CP401 and CP502).
3. Unlock the support ②.
4. Remove the VCR Block in the direction of arrow.

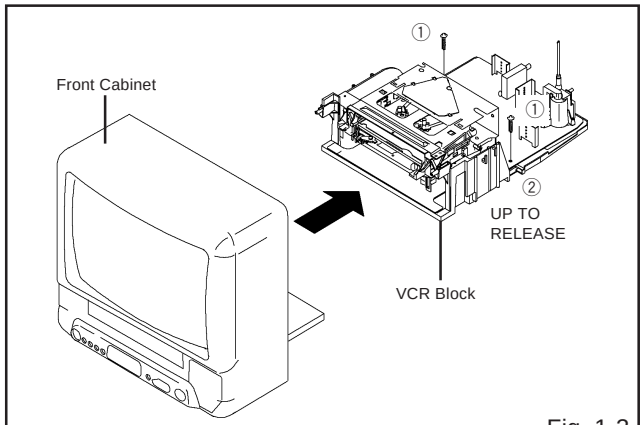

Fig. 1-3

TVBR 13/1942Z DISASSEMBLY INSTRUCTIONS

1-4: DECK SHIELD PLATE, DECK CHASSIS AND BOTTOM SHIELD (Refer to Fig. 1-4)

1. Remove the 3 screws ①.
2. Remove the 3 screws ②.
3. Remove the Deck Shield Plate in the direction of arrow (A).
4. Disconnect the following connectors: (CP1004, CP1005, CP1006, CP4001, CP4002 and CP4003).
5. Remove the Deck Chassis in the direction of arrow (B).
6. Remove the screw ③.
7. Remove the Bottom Shield in the direction of arrow (C).

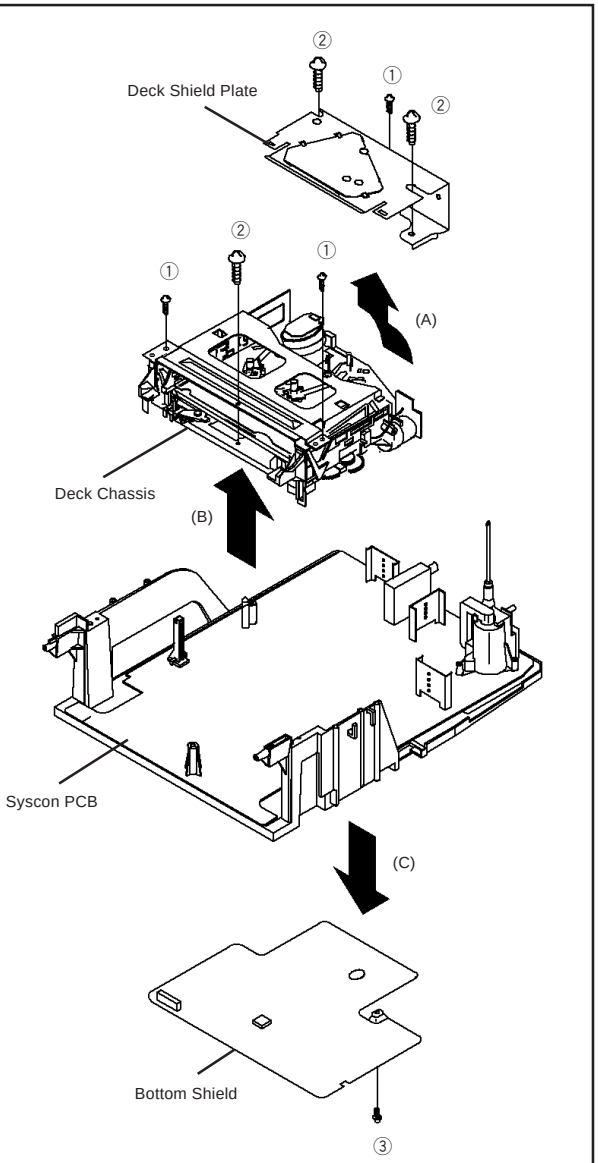

Fig. 1-4

1-5: SYSCON PCB (Refer to Fig. 1-5)

1. Remove the screw ①.
2. Remove the Syscon PCB in the direction of arrow.

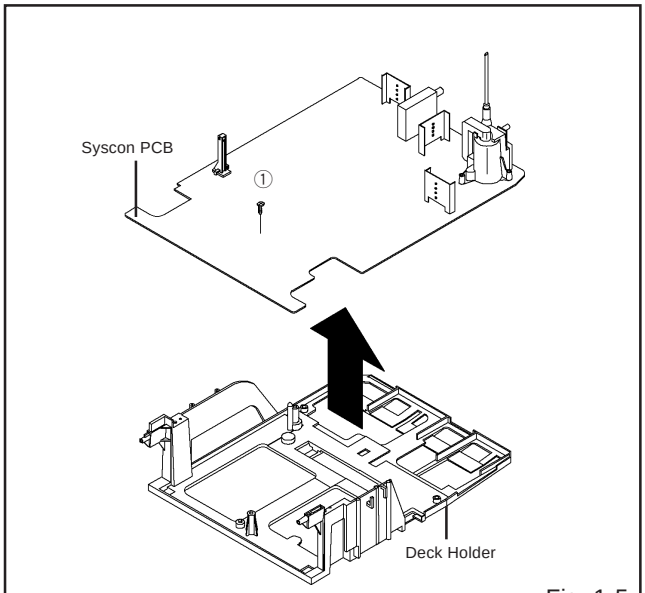

Fig. 1-5

TVBR2542Z DISASSEMBLY INSTRUCTIONS

1. REMOVAL OF MECHANICAL PARTS AND P.C. BOARDS

1-1: BACK CABINET (Refer to Fig. 1-1)

1. Remove the 6 screws ①.
2. Remove the 2 screws ② which are used for holding the Back Cabinet.
3. Remove the Back Cabinet in the direction of arrow.

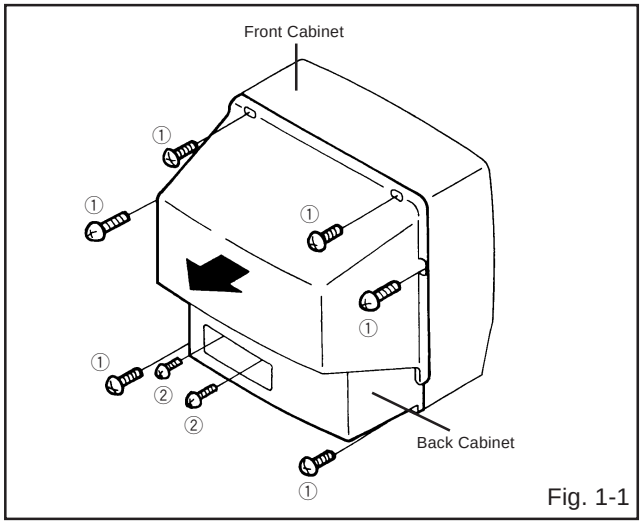

Fig. 1-1

1-2: CRT PCB (Refer to Fig. 1-2)

CAUTION: BEFORE REMOVING THE ANODE CAP, DISCHARGE ELECTRICITY BECAUSE IT CONTAINS HIGH VOLTAGE. BEFORE ATTEMPTING TO REMOVE OR REPAIR ANY PCB, UNPLUG THE POWER CORD FROM THE AC SOURCE.

1. Remove the Anode Cap. (Refer to REMOVAL OF ANODE CAP)
2. Disconnect the following connectors: (CP802 and CP850).
3. Remove the CRT PCB in the direction of arrow.

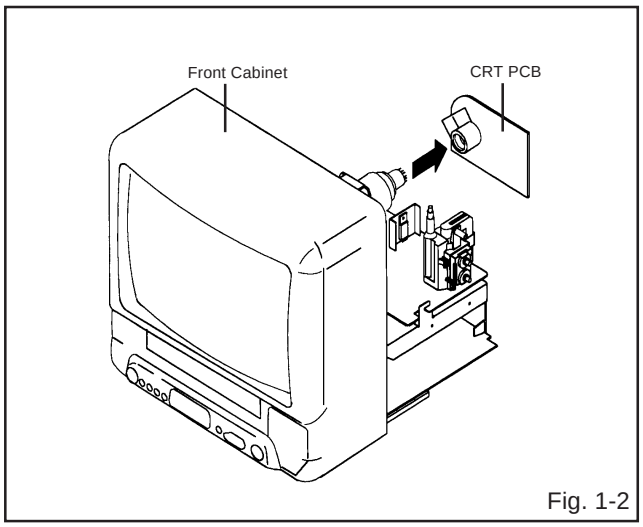

Fig. 1-2

1-3: TV/VCR BLOCK (Refer to Fig. 1-3)

1. Remove the 2 screws ①.
2. Disconnect the following connectors: (CP303, CP401, CP502, CP4201 and CP4202).
3. Unlock the support ②.
4. Remove the TV/VCR Block in the direction of arrow.

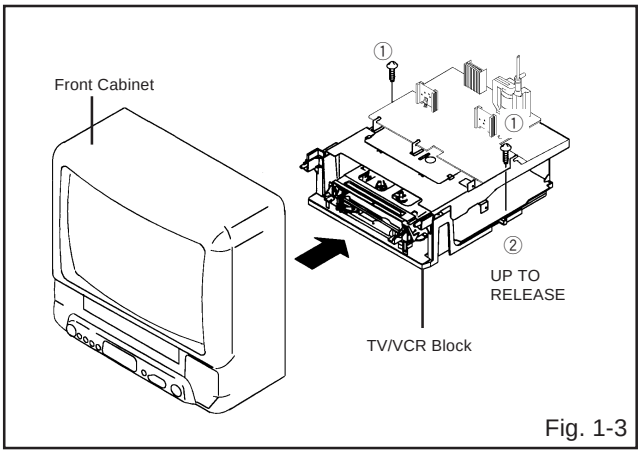

Fig. 1-3

1-4: MAIN PCB (Refer to Fig. 1-4)

1. Remove the PCB Holder in the direction of arrow (A).
2. Remove the 3 screws ①.
3. Disconnect the following connectors: (CP810 and CP820).
4. Remove the Main PCB in the direction of arrow (B).

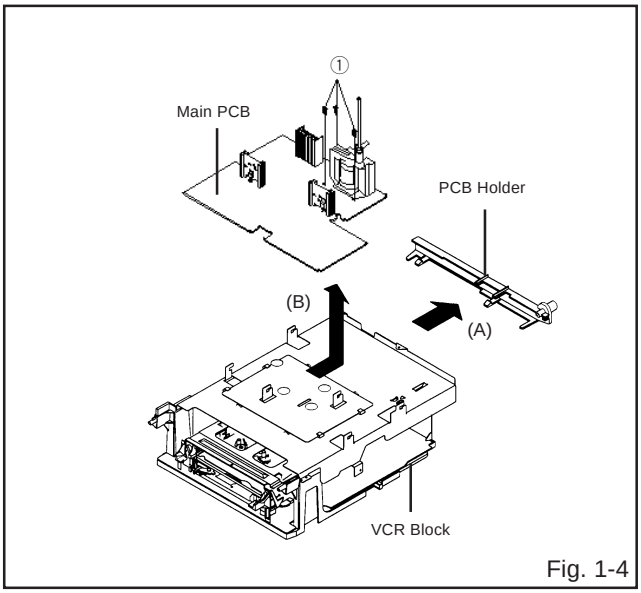

Fig. 1-4

TVBR2542Z DISASSEMBLY INSTRUCTIONS

1-5: DECK SHIELD PLATE (Refer to Fig. 1-5)

1. Remove the 2 screws ①.
2. Remove the screw ②.
3. Remove the Deck Shield Plate in the direction of arrow.

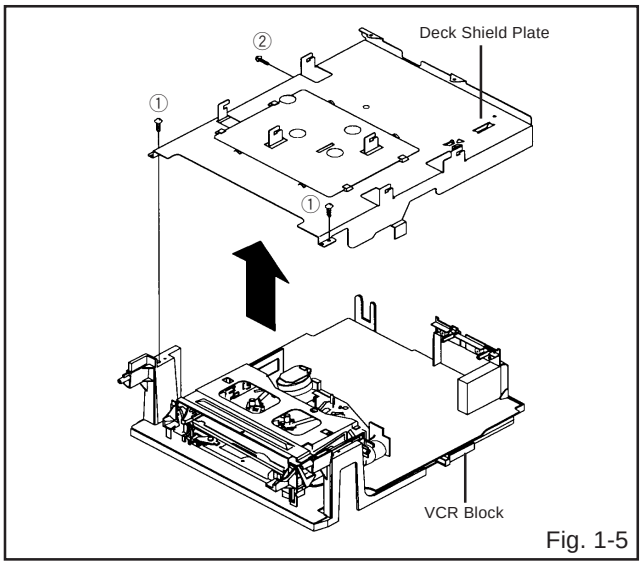

Fig. 1-5

1-6: DECK CHASSIS (Refer to Fig. 1-6)

1. Remove the 3 screws ①.
2. Disconnect the following connectors:
   (CP1004, CP1005, CP1006, CP4001, CP4002 and CP4003).
3. Remove the Deck Chassis in the direction of arrow.

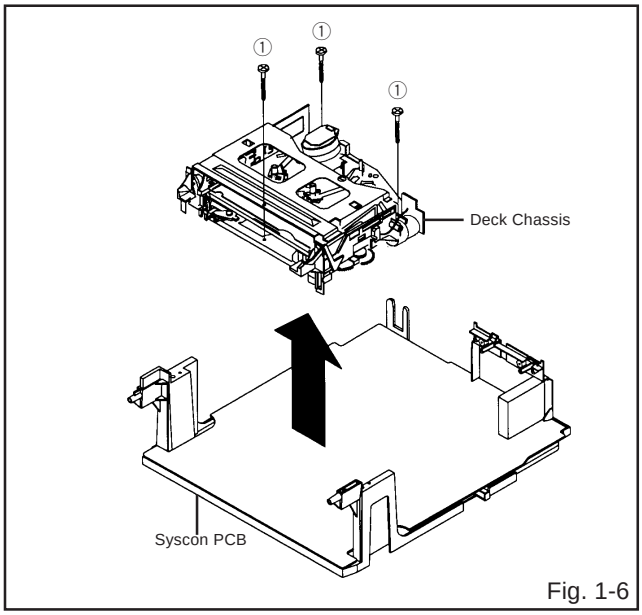

Fig. 1-6

1-7: JACK PLATE AND SYSCON PCB (Refer to Fig. 1-7)

1. Remove the screw ①.
2. Remove the Syscon PCB in the direction of arrow (A).
3. Remove the 2 screw ②.
4. Remove the nut ③.
5. Remove the washer ④.
6. Unlock the 2 supports ⑤.
7. Remove the Jack Plate in the direction of arrow (B).

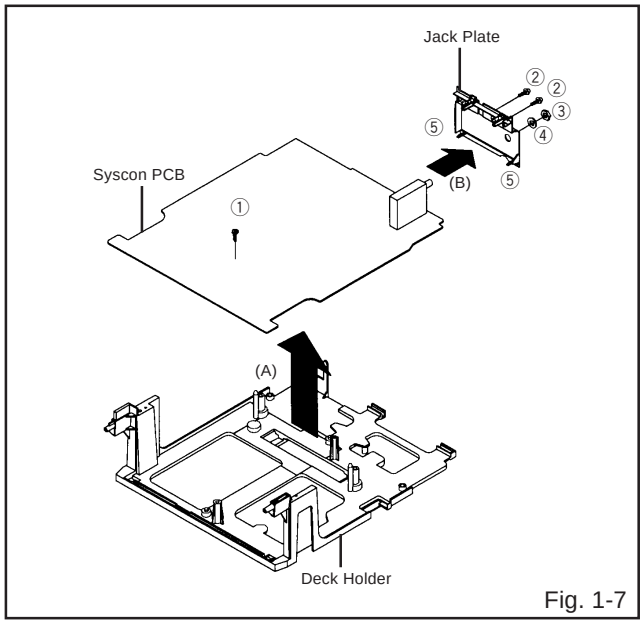

Fig. 1-7

TVBR13/19/2542Z DISASSEMBLY INSTRUCTIONS

2. REMOVAL OF DECK PARTS

2-1: TOP BRACKET (Refer to Fig. 2-1)

1. Remove the 2 screws ①.
2. Slide the 2 supports ② and remove the Top Bracket.

NOTE

When you install the Top Bracket, install the screw (1) first, then install the screw (2).

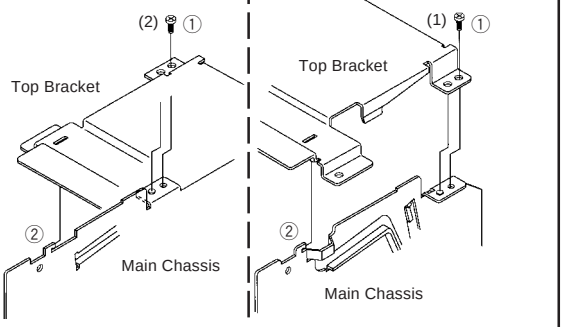

• Screw Torque: 5 ± 0.5kgf•cm

Fig. 2-1

2-2: FLAP LEVER/TAPE GUIDE R (Refer to Fig. 2-2)

1. Move the Cassette Holder Ass'y to the back side.
2. Remove the Polyslider Washer ①.
3. Remove the Flap Lever.
4. Unlock the 3 supports ② and remove the Tape Guide R.

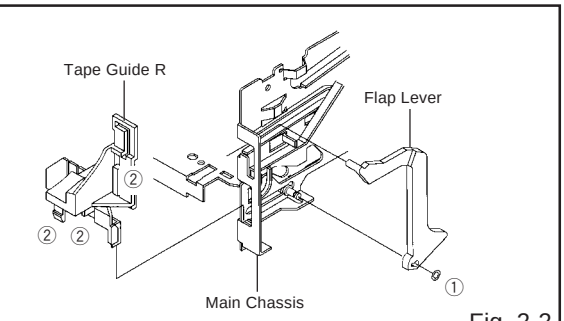

Fig. 2-2

2-3: TAPE GUIDE L (Refer to Fig. 2-3-A)

1. Move the Cassette Holder Ass'y to the back side.
2. Unlock the 2 supports ① and remove the Tape Guide L.
3. Remove the REC Lever. (Recorder only)

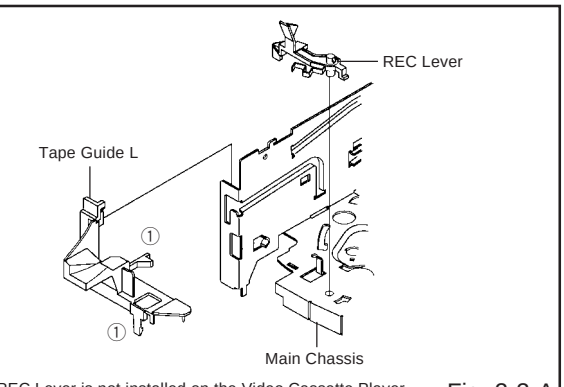

• The REC Lever is not installed on the Video Cassette Player.

Fig. 2-3-A

NOTE

When you install the Tape Guide L, install as shown in the circle of Fig. 2-3-B. **(Refer to Fig. 2-3-B)**

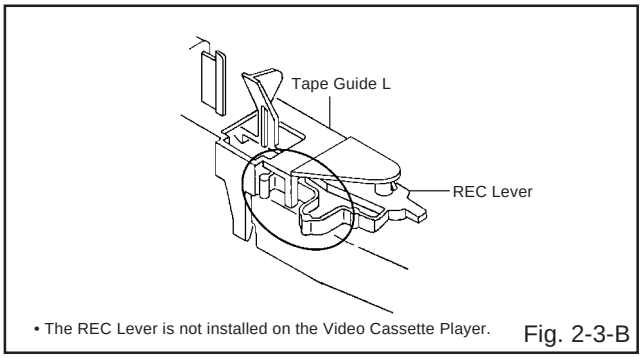

• The REC Lever is not installed on the Video Cassette Player.

Fig. 2-3-B

2-4: CASSETTE HOLDER ASS'Y (Refer to Fig. 2-4)

1. Move the Cassette Holder Ass'y to the front side.
2. Push the Locker R to remove the Cassette Side R.
3. Remove the Cassette Side L.

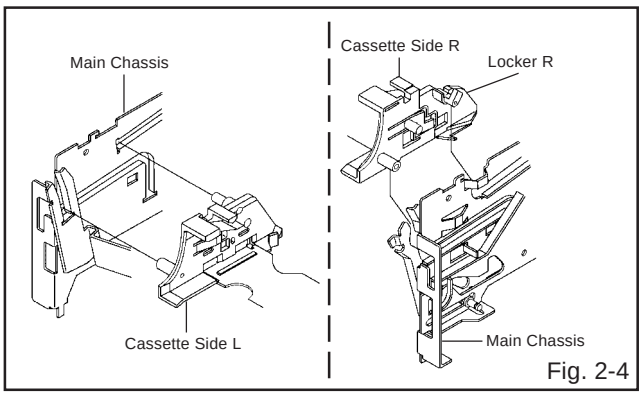

Fig. 2-4

2-5: CASSETTE SIDE L/R (Refer to Fig. 2-5)

1. Unlock the 4 supports ① and then remove the Cassette Side L/R.

NOTE

When you install the Cassette Side R, be sure to move the Locker R after installing.

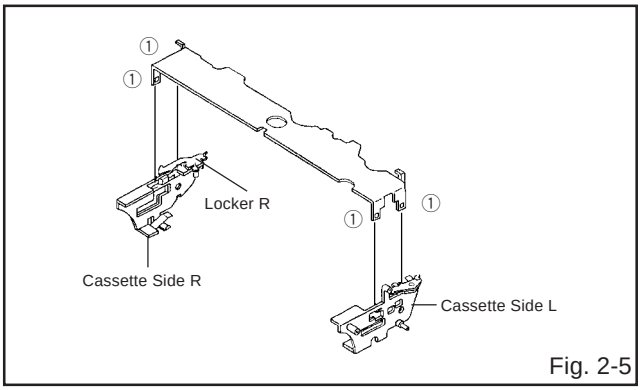

Fig. 2-5

TVBR13/19/2542Z DISASSEMBLY INSTRUCTIONS

2-6: LINK ASS'Y (Refer to Fig. 2-6)

1. Set the Link Ass'y to the Eject position.
2. Remove the (A) side of the Link Ass'y first, then remove the (B) side.

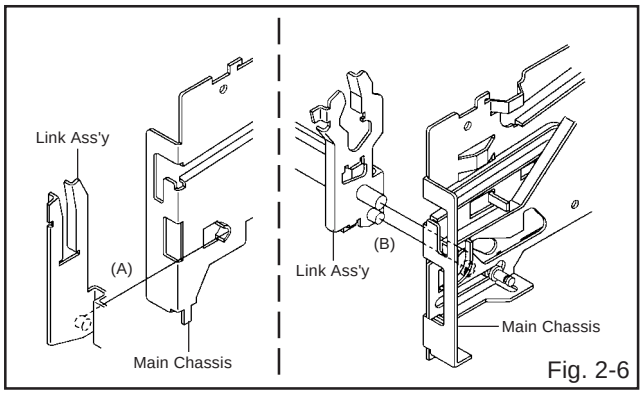

Fig. 2-6

2-7: LOADING MOTOR ASS'Y (Refer to Fig. 2-7)

1. Remove the Link Lever.
2. Remove the Dumper Spring.
3. Remove the 2 screws 1 .
4. Unlock the support 2 and remove the Loading Motor Ass'y.
5. Unlock the 2 supports 3 and remove the Deck PCB (BOT).

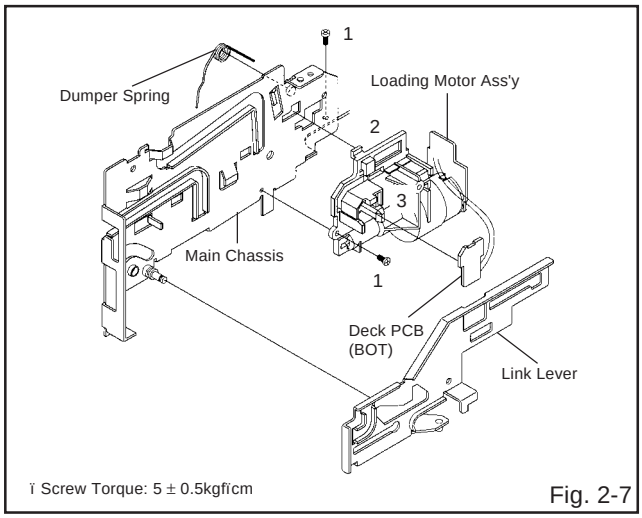

Fig. 2-7

2-8: SENSOR COVER L3 (Refer to Fig. 2-8)

1. Unlock the support 1 and remove the Sensor Cover L3.

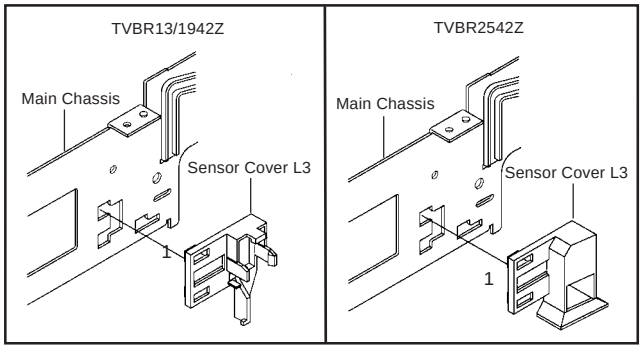

Fig. 2-8

2-9: TENSION ASS'Y (Refer to Fig. 2-9-A)

1. Move the Inclined S Ass'y to the back side.
2. Remove the Tension Spring.
3. Unlock the support 1 and remove the Tension Arm Ass'y.
4. Remove the Tension Adjust.
5. Unlock the 2 supports 2 and remove the Tension Band Ass'y.
6. Unlock the support 3 and remove the Tension Holder.
7. Remove the SS Brake Spring.
8. Remove the SS Arm Brake.

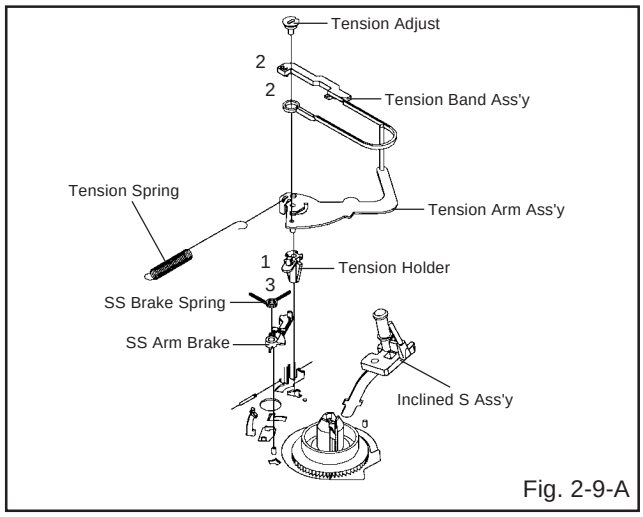

Fig. 2-9-A

NOTE

When you install the Tension Adjust, install as shown in Fig. 2-9-B. **(Refer to Fig. 2-9-B)**

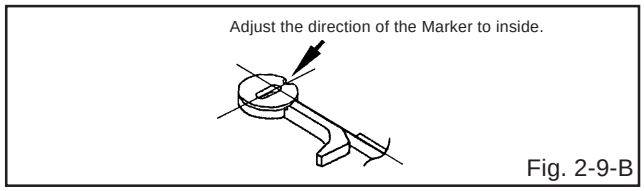

Fig. 2-9-B

2-10: T BRAKE ASS'Y (Refer to Fig. 2-10)

1. Remove the T Brake Spring.
2. Remove the T Brake Ass'y.

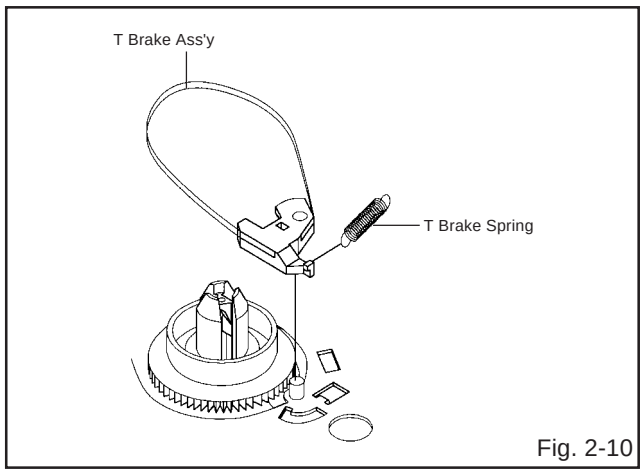

Fig. 2-10

DISASSEMBLY INSTRUCTIONS

2-11: S REEL/T REEL (Refer to Fig. 2-11)

1. Remove the S Reel and T Reel.
2. Remove the 2 Polyslider Washers 1 .

NOTE

1. Take care not to damage the gears of the S Reel and T Reel.
2. The Polyslider Washer may be remain on the back of the reel.
3. Take care not to damage the shaft.
4. Do not touch section "A" of S Reel and T Reel. (Use gloves.) **(Refer to Fig. 2-11)**

5. When you install the reel, clean the shaft and oil it. (If you do not oil, noise may be heard in FF/REW mode.)
6. After installing the reel, adjust the height of the reel. **(Refer to MECHANICAL ADJUSTMENT)**

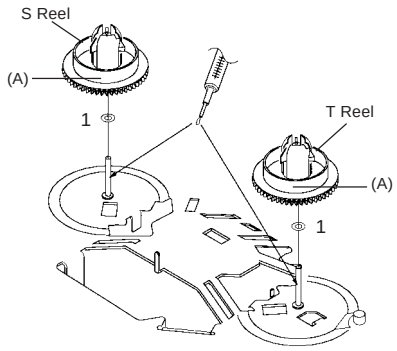

Fig. 2-11

2-12: PINCH ROLLER BLOCK/P5-3 ARM ASS'Y (Refer to Fig. 2-12-A)

1. Remove P5 Spring.
2. Remove screw 1 .
3. Unlock the 2 supports 2 and remove the Cassette Opener.
4. Remove the Pinch Roller Block, Pinch Roller Arm Spring, Pinch Roller Lever Ass'y and P5-3 Arm Ass'y.

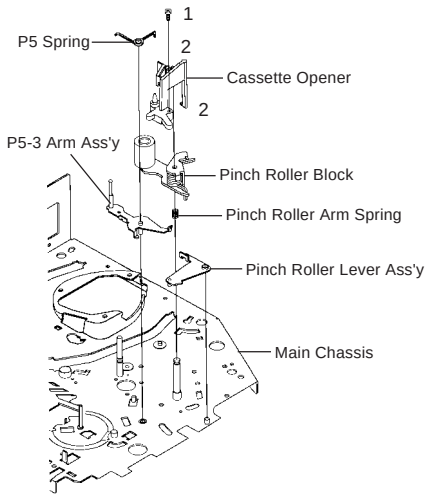

ï Screw Torque: 5 ± 0.5kgfïcm

Fig. 2-12-A

NOTE

1. Do not touch the Pinch Roller. (Use gloves.)
2. When you install the Pinch Roller Block, install as shown in the circle of Fig. 2-12-B. **(Refer to Fig. 2-12-B)**

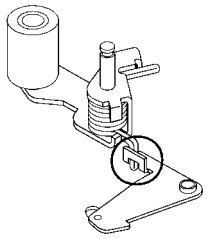
Fig. 2-12-B

2-13: A/C HEAD (Refer to Fig. 2-13-A)

1. Remove screw 1 .
2. Remove the A/C Head Base.
3. Remove the 3 screws 2 .
4. Remove the A/C Head and A/C Head Spring.

NOTE

1. Do not touch the A/C Head. (Use gloves.)
2. When you install the A/C Head Spring, install as shown in Fig. 2-13-B. **(Refer to Fig. 2-13-B)**
3. When you install the A/C Head, tighten screw (1) first, then tighten screw (2), finally tighten screw (3).

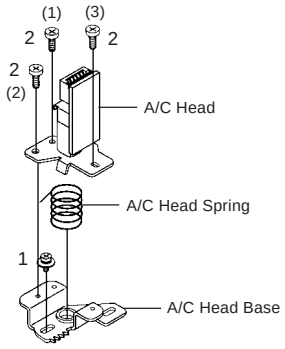

ï Screw Torque: 4 ± 0.5kgfïcm (Screw 1)

Fig. 2-13-A

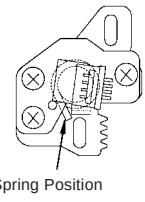

Fig. 2-13-B

2-14: FE HEAD (RECORDER ONLY) (Refer to Fig. 2-14)

1. Remove screw 1 .
2. Remove the FE Head.

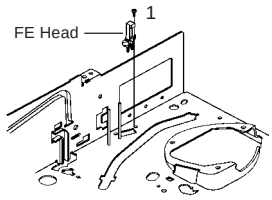

ï The FE Head is not installed on the Video Cassette Player.
ï Screw Torque: 4 ± 0.5kgfïcm

Fig. 2-14

DISASSEMBLY INSTRUCTIONS

2-15: AHC ASS'Y/CYLINDER UNIT ASS'Y (Refer to Fig. 2-15)

1. Unlock the support ① and remove the AHC Ass'y.
2. Remove the 3 screws ②.
3. Remove the Cylinder Unit Ass'y.

NOTE

When you install the Cylinder Unit Ass'y, tighten the screws from (1) to (3) in order while pulling the Ass'y toward the left front direction.

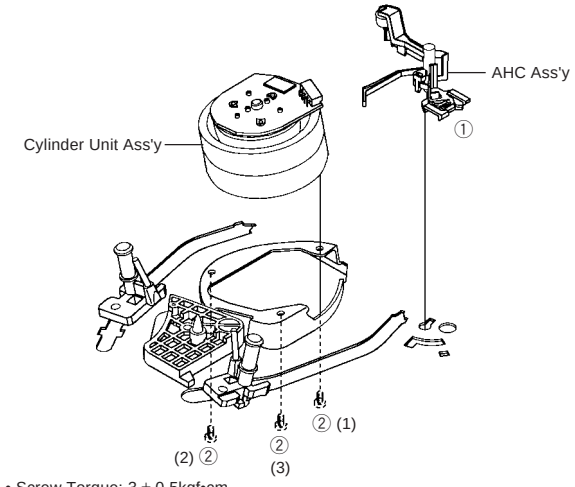

Fig. 2-15

2-16: CAPSTAN DD UNIT (Refer to Fig. 2-16)

1. Remove the Capstan Belt.
2. Remove the 3 screws ①.
3. Remove the Capstan DD Unit.

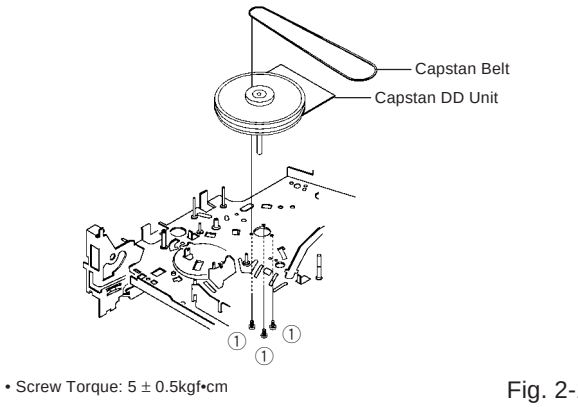

Fig. 2-16

2-17: MIDDLE GEAR/MAIN CAM (Refer to Fig. 2-17-A)

1. Remove the Polyslider Washer ①, then remove the Middle Gear.
2. Remove the E-Ring, then remove the Main Cam, P5 Cam and Pinch Roller Cam.
3. Remove the Polyslider Washer ②, then remove the Joint Gear.

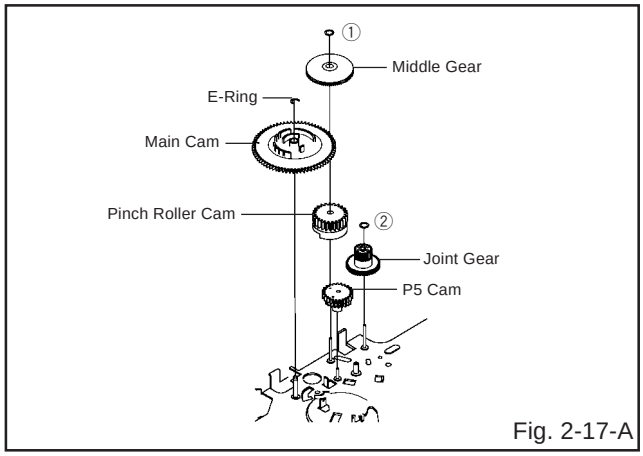

Fig. 2-17-A

NOTE

When you install the Pinch Roller Cam, P5 Cam and Main Cam, align each marker. **(Refer to Fig. 2-17-B)**

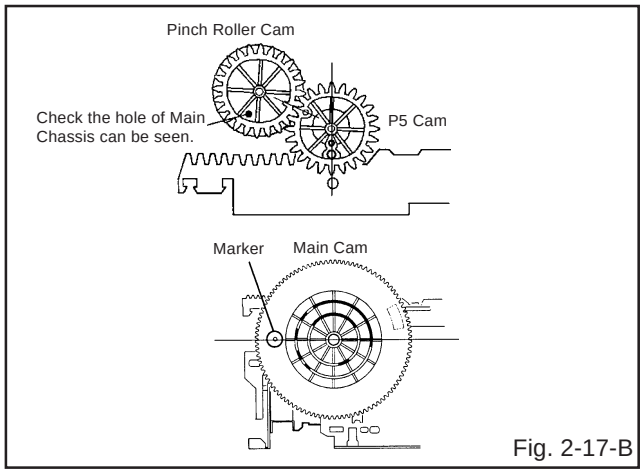

Fig. 2-17-B

2-18: CLUTCH ASS'Y (Refer to Fig. 2-18)

1. Remove the Polyslider Washer ①.
2. Remove the Clutch Ass'y, Ring Spring and Coupling Gear.
3. Unlock the 2 supports ② and remove the Clutch Lever.

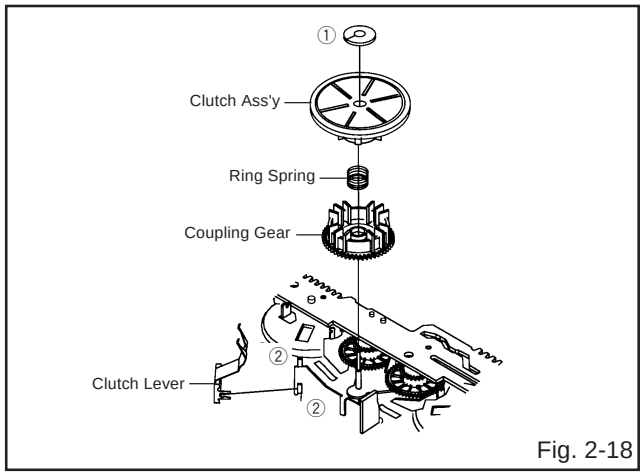

Fig. 2-18

DISASSEMBLY INSTRUCTIONS

2-19: LOADING GEAR S/T ASS'Y (Refer to Fig. 2-19-A)

1. Remove the E-Ring ① and remove the Main Loading Gear.
2. Remove the Capstan Brake Spring.
3. Slide the Main Rod and remove the Capstan Brake Ass'y.
4. Remove the Main Rod, Tension Lever, Clutch Actuator, Idler Arm Ass'y.
5. Remove the screw ②.
6. Remove the LED Reflecter.
7. Remove the Loading Arm S Ass'y and Loading Arm T Ass'y.
8. Remove the Loading Gear S and Loading Gear T.
9. Remove the Loading Gear Spring.

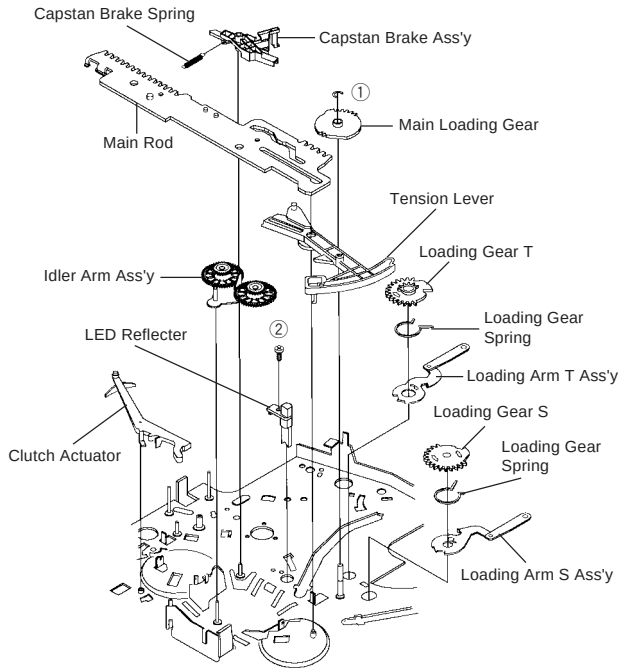

• Screw Torque: 5 ± 0.5kgf•cm

Fig. 2-19-A

NOTES

1. When you install the Loading Arm S Ass'y, Loading Arm T Ass'y and Main Loading Gear, align each marker. **(Refer to Fig. 2-19-B)**

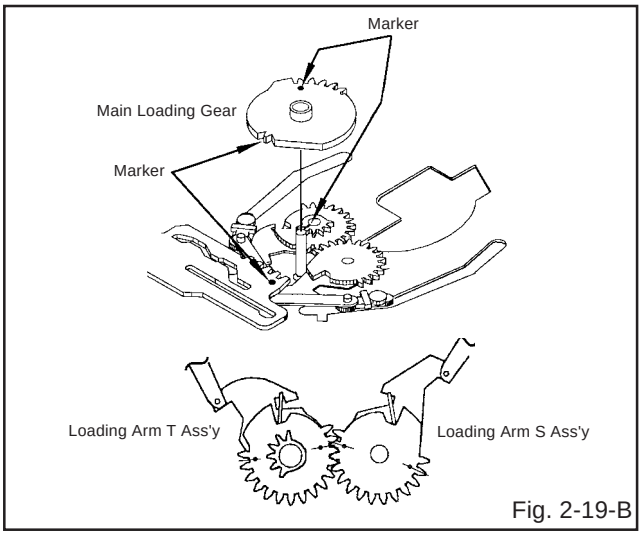

Fig. 2-19-B

2. When you install the Clutch Actuator, install as shown in the circle of Fig. 2-19-C. **(Refer to Fig. 2-19-C)**

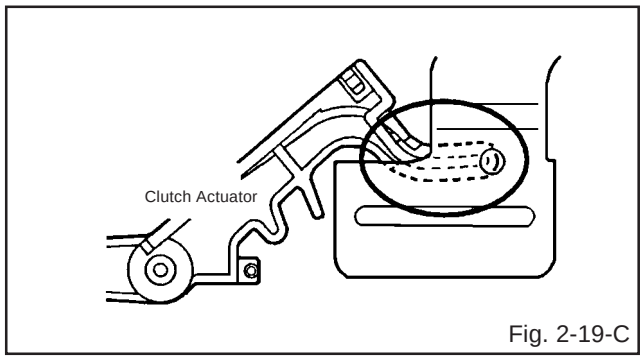

Fig. 2-19-C

2-20: INCLINED S/T ASS'Y (Refer to Fig. 2-20)

1. Unlock the support ① and remove the P4 Cover.
2. Remove the screw ②.
3. Unlock the support ③ and remove the Loading Gear Holder.
4. Remove the Inclined S.
5. Remove the Inclined T.
6. Remove the 2 screws ④, then remove the Guide Roller.

NOTE

Do not touch the roller of Guide Roller.

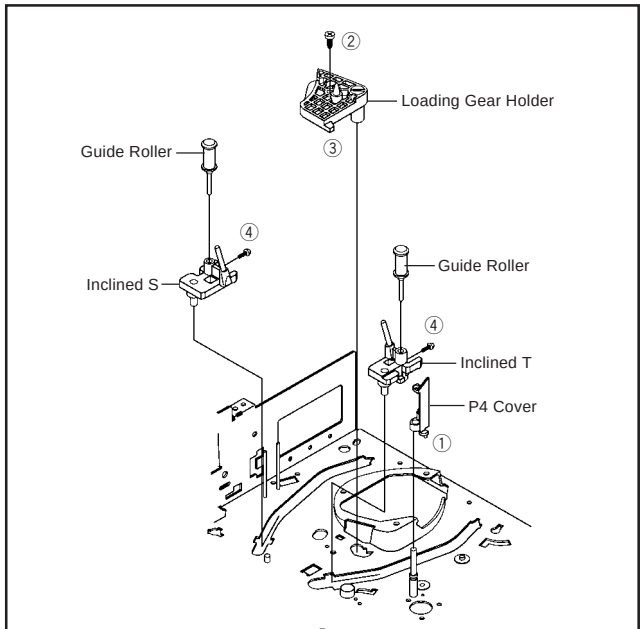

• Screw Torque: 5 ± 0.2kgf•cm (Screw ②)
• Screw Torque: 0.7 ± 0.2kgf•cm (Screw ④)

Fig. 2-20

DISASSEMBLY INSTRUCTIONS

3. REMOVAL OF ANODE CAP

Read the following **NOTED** items before starting work.

* After turning the power off there might still be a potential voltage that is very dangerous. When removing the Anode Cap, make sure to discharge the Anode Cap's potential voltage.
* Do not use pliers to loosen or tighten the Anode Cap terminal, this may cause the spring to be damaged.

REMOVAL

1. Follow the steps as follows to discharge the Anode Cap. **(Refer to Fig. 3-1.)**
   Connect one end of an Alligator Clip to the metal part of a flat-blade screwdriver and the other end to ground. While holding the plastic part of the insulated Screwdriver, touch the support of the Anode with the tip of the Screwdriver.
   A cracking noise will be heard as the voltage is discharged.

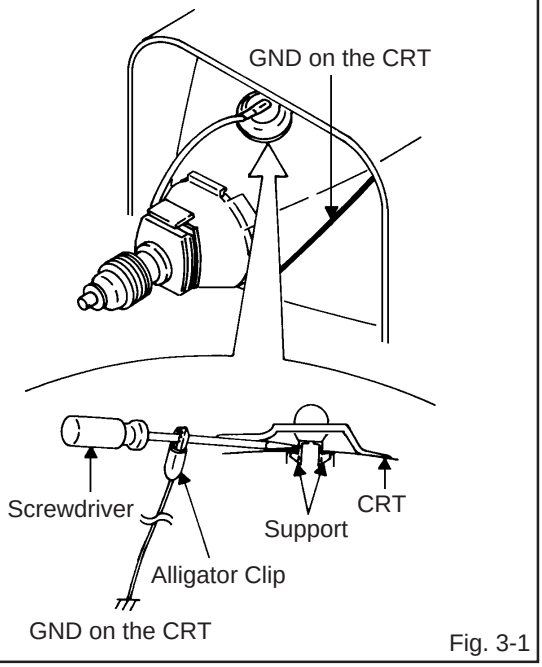

Fig. 3-1

2. Flip up the sides of the Rubber Cap in the direction of the arrow and remove one side of the support. **(Refer to Fig. 3-2.)**

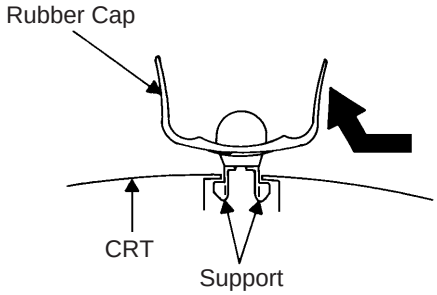

Fig. 3-2

3. After one side is removed, pull in the opposite direction to remove the other.

NOTE

Take care not to damage the Rubber Cap.

INSTALLATION

1. Clean the spot where the cap was located with a small amount of alcohol. **(Refer to Fig. 3-3.)**

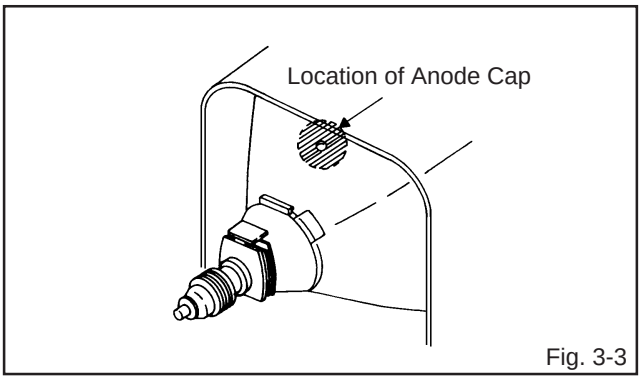

Fig. 3-3

NOTE

Confirm that there is no dirt, dust, etc. at the spot where the cap was located.

2. Arrange the wire of the Anode Cap and make sure the wire is not twisted.
3. Turn the Rubber Cap over. **(Refer to Fig. 3-4.)**

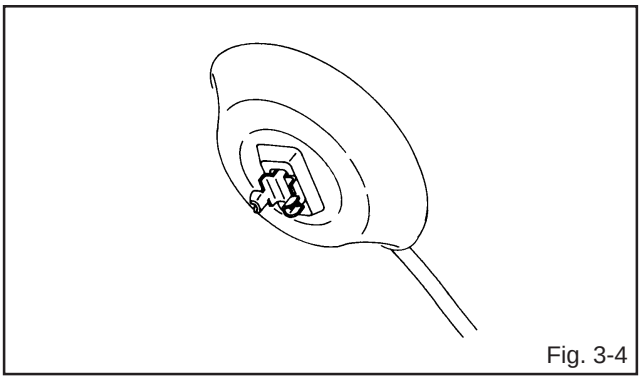
Fig. 3-4

4. Insert one end of the Anode Support into the anode button, then the other as shown in **Fig. 3-5**.

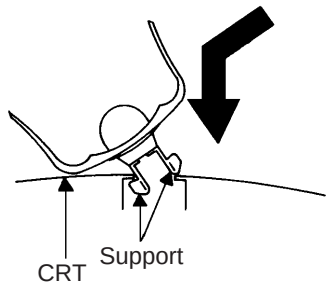

Fig. 3-5

5. Confirm that the Support is securely connected.
6. Put the Rubber Cap on without moving any parts.

4. REMOVAL OF DEFLECTION YOKE

(Refer to Fig. 4-1)

1. Loosen the screw ①.
2. Remove the Convergence • Purity Magnet in the direction of arrow (A).
3. Loosen the screw ②.
4. Remove the 3 Wedges.
5. Remove the Deflection Yoke in the direction of arrow (B).

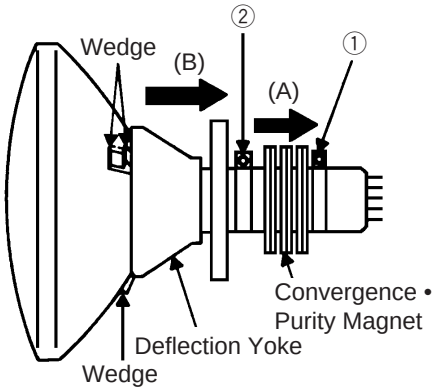

Fig. 4-1

INSTALLATION

Install new Deflection Yoke in reverse steps of REMOVAL.

NOTE

After adjusting the purity and the convergence, tighten the screw ② and lock the wedges. **See page 2-31 for Purity Adj.**

KEY TO ABBREVIATIONS

A	**A/C**	:	Audio/Control
	ACC	:	Automatic Color Control
	AE	:	Audio Erase
	AFC	:	Automatic Frequency Control
	AFT	:	Automatic Fine Tuning
	AFT DET	:	Automatic Fine Tuning Detect
	AGC	:	Automatic Gain Control
	AMP	:	Amplifier
	ANT	:	Antenna
	A.PB	:	Audio Playback
	APC	:	Automatic Phase Control
	ASS'Y	:	Assembly
	AT	:	All Time
	AUTO	:	Automatic
	A/V	:	Audio/Video
B	**BGP**	:	Burst Gate Pulse
	BOT	:	Beginning of Tape
	BPF	:	Bandpass Filter
	BRAKE SOL	:	Brake Solenoid
	BUFF	:	Buffer
	B/W	:	Black and White
C	**C**	:	Capacitance, Collector
	CASE	:	Cassette
	CAP	:	Capstan
	CARR	:	Carrier
	CH	:	Channel
	CLK	:	Clock
	CLOCK (SY-SE)	:	Clock (Syscon to Servo)
	COMB	:	Combination, Comb Filter
	CONV	:	Converter
	CPM	:	Capstan Motor
	CTL	:	Control
	CYL	:	Cylinder
	CYL-M	:	Cylinder-Motor
	CYL SENS	:	Cylinder-Sensor
D	**DATA (SY-CE)**	:	Data (Syscon to Servo)
	dB	:	Decibel
	DC	:	Direct Current
	DD Unit	:	Direct Drive Motor Unit
	DEMOD	:	Demodulator
	DET	:	Detector
	DEV	:	Deviation
E	**E**	:	Emitter
	EF	:	Emitter Follower
	EMPH	:	Emphasis
	ENC	:	Encoder
	ENV	:	Envelope
	EOT	:	End of Tape
	EQ	:	Equalizer
	EXT	:	External
F	**F**	:	Fuse
	FBC	:	Feed Back Clamp
	FE	:	Full Erase
	FF	:	Fast Forward, Flipflop
	FG	:	Frequency Generator
	FL SW	:	Front Loading Switch
	FM	:	Frequency Modulation
	FSC	:	Frequency Sub Carrier
	FWD	:	Forward
G	**GEN**	:	Generator
	GND	:	Ground
H	**H.P.F**	:	High Pass Filter
	H.SW	:	Head Switch
	Hz	:	Hertz
I	**IC**	:	Integrated Circuit
	IF	:	Intermediate Frequency
	IND	:	Indicator
	INV	:	Inverter
K	**KIL**	:	Killer
L	**L**	:	Left
	LED	:	Light Emitting Diode
	LIMIT AMP	:	Limiter Amplifier
	LM, LDM	:	Loading Motor
	LP	:	Long Play
	L.P.F	:	Low Pass Filter
	LUMI.	:	Luminance
M	**M**	:	Motor
	MAX	:	Maximum
	MINI	:	Minimum
	MIX	:	Mixer, mixing
	MM	:	Monostable Multivibrator
	MOD	:	Modulator, Modulation
	MPX	:	Multiplexer, Multiplex
	MS SW	:	Mecha State Switch
N	**NC**	:	Non Connection
	NR	:	Noise Reduction
O	**OSC**	:	Oscillator
	OPE	:	Operation
P	**PB**	:	Playback
	PB CTL	:	Playback Control
	PB-C	:	Playback-Chrominance
	PB-Y	:	Playback-Luminance
	PCB	:	Printed Circuit Board
	P. CON	:	Power Control
	PD	:	Phase Detector
	PG	:	Pulse Generator
	P-P	:	Peak-to Peak
R	**R**	:	Right
	REC	:	Recording
	REC-C	:	Recording-Chrominance
	REC-Y	:	Recording-Luminance
	REEL BRK	:	Reel Brake
	REEL S	:	Reel Sensor
	REF	:	Reference
	REG	:	Regulated, Regulator
	REW	:	Rewind
	REV, RVS	:	Reverse
	RF	:	Radio Frequency
	RMC	:	Remote Control
	RY	:	Relay
S	**S. CLK**	:	Serial Clock
	S. COM	:	Sensor Common
	S. DATA	:	Serial Data
	SEG	:	Segment
	SEL	:	Select, Selector
	SENS	:	Sensor
	SER	:	Search Mode
	SI	:	Serial Input
	SIF	:	Sound Intermediate Frequency
	SO	:	Serial Output
	SOL	:	Solenoid
	SP	:	Standard Play
	STB	:	Serial Strobe
	SW	:	Switch

KEY TO ABBREVIATIONS

S	**SYNC**	:	Synchronization
	SYNC SEP	:	Sync Separator, Separation
T	**TR**	:	Transistor
	TRAC	:	Tracking
	TRACK PB	:	Track Playback
	TP	:	Test Point
U	**UNREG**	:	Unregulated
V	**V**	:	Volt
	VCO	:	Voltage Controlled Oscillator
	VIF	:	Video Intermediate Frequency
	VP	:	Vertical Pulse, Voltage Display
	V.PB	:	Video Playback
	VR	:	Variable Resistor
	V.REC	:	Video Recording
	VSF	:	Visual Search Fast Forward
	VSR	:	Visual Search Rewind
	VSS	:	Voltage Super Source
	V-SYNC	:	Vertical-Synchronization
	VT	:	Voltage Tuning
X	**X'TAL**	:	Crystal
Y	**Y/C**	:	Luminance/Chrominance

SERVICE MODE LIST

This unit provided with the following SERVICE MODES so you can repair, examine and adjust easily.

To enter SERVICE MODE, unplug AC cord for at least 5 seconds till actual clock time is lost. Then press and hold Vol (-)

button of main unit and remote controle simultaneously.

The pressing of set key and remote control key will not be possible if clock has been set. To reset clock, unplug AC cord and allow at least 5 seconds before Power On.

Set Key	Remocon Key	Operations
VOL. (-) MIN	0	Releasing of V-CHIP PASSWORD.
VOL. (-) MIN	1	Initialization of the factory. NOTE: Do not use this for the normal servicing.
VOL. (-) MIN	2	Horizontal position adjustment of OSD. NOTE: Also can be adjusted by using the Adjustment MENU. Refer to the "ELECTRICAL ADJUSTMENT" (OSD HORIZONTAL).
VOL. (-) MIN	3	Adjust the PG SHIFTER automatically. Refer to the "ELECTRICAL ADJUSTMENT" (PG SHIFTER).
VOL. (-) MIN	4	Adjust the PG SHIFTER manually. Refer to the "ELECTRICAL ADJUSTMENT" (PG SHIFTER).
VOL. (-) MIN	5	Adjusting of the Tracking to the center position. NOTE: Also can be adjusted by pressing the ATR button for more than 2 seconds during PLAY.
VOL. (-) MIN	6	POWER ON total hours and PLAY/REC total hours are displayed on the screen. Refer to the "PREVENTIVE CHECKS AND SERVICE INTERVALS" (CONFIRMATION OF USING HOURS). Can be checked of the INITIAL DATA of MEMORY IC. Refer to the "NOTE FOR THE REPLACING OF MEMORY IC".
VOL. (-) MIN	8	Writing of EEPROM initial data. NOTE: Do not use this for the normal servicing.
VOL. (-) MIN	9	Display of the Adjustment MENU on the screen. Refer to the "ELECTRICAL ADJUSTMENT" (On-Screen Display Adjustment).

Method	Operations
Press the ATR button on the remote control for more than 2 seconds during PLAY.	Adjusting of the Tracking to the center position. Refer to the "MECHANICAL ADJUSTMENT" (GUIDE ROLLER) and "ELECTRICAL ADJUSTMENT" (PG SHIFTER).
Make the short circuit between the test point of SERVICE and the GND.	The EOT/BOT/Reel sensor do not work at this moment. Refer to the "PREPARATION FOR SERVICING"

PREVENTIVE CHECKS AND SERVICE INTERVALS

The following standard table depends on environmental conditions and usage. Unless maintenance is properly carried out, the following service intervals may be quite shortened as harmful effects may be had on other parts. Also, long term storage or misuse may cause transformation and aging of rubber parts.

Time / Parts Name	500 hours	1,000 hours	1,500 hours	2,000 hours	3,000 hours	Notes
Audio Control Head	■	■	■	■	■	Clean those parts in contact with the tape.
Full Erase Head (Recorder only)	■	■	■	■	■	
Capstan Belt			■	■	●	Clean the rubber, and parts which the rubber touches.
Pinch Roller	■	■	■	■	■ ●	
Capstan DD Unit					●	
Loading Motor					●	
Tension Band					●	
Capstan Shaft	■	■	■	■	■	
Tape Running Guide Post	■	■	■	■	■	Replace when rolling becomes abnormal.
Cylinder Unit	■	■	■	■	●	Clean the Head

■ : Clean
● : Replace

CONFIRMATION OF HOURS USED

POWER ON total hours and PLAY/REC total hours can be checked on the screen.
Total hours are displayed in 16 system of notation.

NOTE: The confirmation of hours used will not be possible if clock has been set. To reset clock, either unplug AC cord and allow at least 5 seconds before Power On.

1. Set the VOLUME to minimum.
2. While holding down VOLUME button on front cabinet, press key 6 on remote control simultaneously.
3. After the confirmation of hours used, turn off the power.

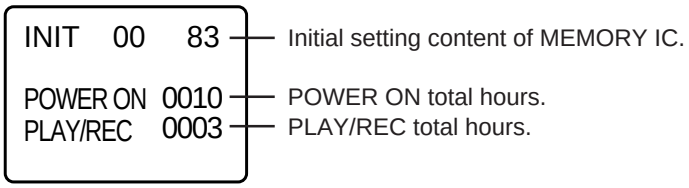

(16 x 16 x 16 x thousands digit value) + (16 x 16 x hundreds digit value) + (16 x tens digit value) + (ones digit value)

PREVENTIVE CHECKS AND SERVICE INTERVALS

CLEANING

NOTE

After cleaning the heads with isopropyl alcohol, do not run a tape until the heads dry completely. If the heads are not completely dry and alcohol gets on the tape, damage may occur.

1. AUDIO CONTROL HEAD

Wrap a piece of chamois around your finger. Dip it in isopropyl alcohol and clean the audio control head by wiping it horizontally. Clean the full erase head in the same manner. **(Refer to the figure below.)**

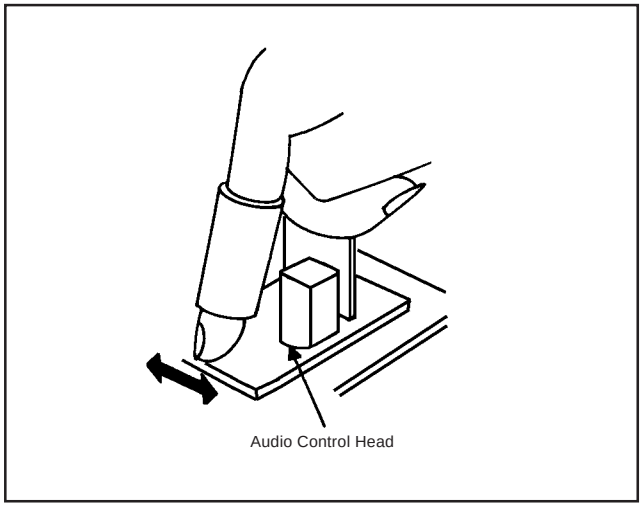

2. TAPE RUNNING SYSTEM

When cleaning the tape transport system, use the gauze moistened with isopropyl alcohol.

3. CYLINDER

Wrap a piece of chamois around your finger. Dip it in isopropyl alcohol. Hold it to the cylinder head softly. Turn the cylinder head counterclockwise to clean it (in the direction of the arrow). **(Refer to the figure below.)**

NOTE

Do not exert force against the cylinder head. Do not move the chamois upward or downward on the head.

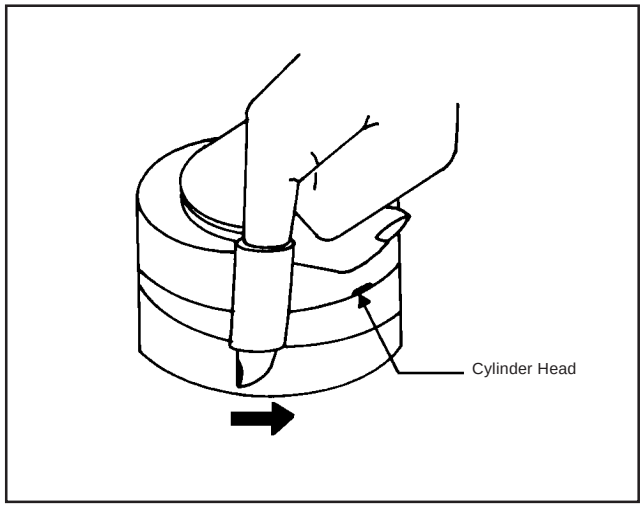

NOTE FOR THE REPLACING OF MEMORY IC

If a service repair is undertaken where it has been required to change the MEMORY IC, the following steps should be taken to ensure correct data settings while making reference to TABLE 1.

NOTE: Initial Data setting will not be possible if clock has been set. To reset clock, either unplug AC cord and allow at least 5 seconds before Power On.

TVBR1342Z

ADDRESS	DATA	ADDRESS	DATA	ADDRESS	DATA	ADDRESS	DATA	ADDRESS	DATA
00	08	0A	10	14	00	1E	8D	28	01
01	13	0B	97	15	00	1F	00	29	00
02	82	0C	19	16	00	20	00		
03	63	0D	00	17	05	21	00		
04	83	0E	00	18	05	22	00		
05	14	0F	00	19	00	23	00		
06	34	10	8C	1A	A9	24	00		
07	89	11	68	1B	0F	25	00		
08	75	12	5C	1C	04	26	00		
09	30	13	53	1D	39	27	00		

TVBR1942Z

ADDRESS	DATA	ADDRESS	DATA	ADDRESS	DATA	ADDRESS	DATA	ADDRESS	DATA
00	08	0A	10	14	00	1E	8D	28	01
01	1B	0B	97	15	00	1F	00	29	00
02	C2	0C	19	16	00	20	00		
03	63	0D	00	17	05	21	00		
04	83	0E	00	18	05	22	00		
05	14	0F	00	19	00	23	00		
06	34	10	8C	1A	A9	24	00		
07	89	11	68	1B	0F	25	00		
08	75	12	5C	1C	04	26	00		
09	3B	13	53	1D	39	27	00		

1. Enter DATA SET mode by setting VOLUME to minimum.
2. While holding down VOLUME button on front cabinet, press key 6 on remote control simultaneously. ADDRESS and DATA should appear as FIG 1.

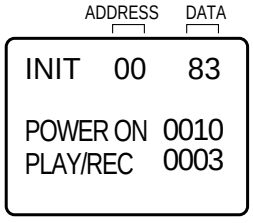

Fig. 1

3. ADDRESS is now selected and should "blink". Using the SET + or - keys on the remote, step through the ADDRESS until required ADDRESS to be changed is reached.
4. Press ENTER to select DATA. When DATA is selected, it will "blink".
5. Again, step through the DATA using SET + or - until required DATA value has been selected.
6. Pressing ENTER will take you back to ADDRESS for further selection if necessary.
7. Repeat steps 3 to 6 until all data has been checked.
8. When satisfied correct DATA has been entered, turn POWER off (return to STANDBY MODE) to finish DATA input.

The unit will now have the correct DATA for the new MEMORY IC.

NOTE FOR THE REPLACING OF MEMORY IC

If a service repair is undertaken where it has been required to change the MEMORY IC, the following steps should be taken to ensure correct data settings while making reference to TABLE 1.

NOTE: Initial Data setting will not be possible if clock has been set. To reset clock, either unplug AC cord and allow at least 5 minutes before Power On or alternatively, discharge backup capacitor.

TVBR2542Z

ADDRESS	DATA	ADDRESS	DATA	ADDRESS	DATA	ADDRESS	DATA
00	88	0D	00	1A	A9	27	00
01	13	0E	00	1B	0F	28	01
02	82	0F	00	1C	04	29	00
03	63	10	8C	1D	39		
04	C3	11	68	1E	8D		
05	14	12	5C	1F	00		
06	34	13	53	20	00		
07	8B	14	00	21	00		
08	75	15	00	22	00		
09	30	16	00	23	00		
0A	10	17	05	24	00		
0B	97	18	05	25	00		
0C	00	19	00	26	00		

1. Enter DATA SET mode by setting VOLUME to minimum.
2. While holding down VOLUME button on front cabinet, press key 6 on remote control for more than 2 seconds. ADDRESS and DATA should appear as FIG 1.

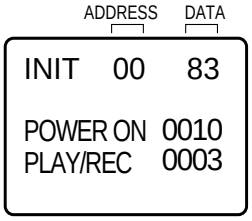

Fig. 1

3. ADDRESS is now selected and should "blink". Using the SET+ or - keys on the remote, step through the ADDRESS until required ADDRESS to be changed is reached.
4. Press ENTER to select DATA. When DATA is selected, it will "blink".
5. Again, step through the DATA using SET+ or - until required DATA value has been selected.
6. Pressing ENTER will take you back to ADDRESS for further selection if necessary.
7. Repeat steps 3 to 6 until all data has been checked.
8. When satisfied correct DATA has been entered, turn POWER off (return to STANDBY MODE) to finish DATA input.

The unit will now have the correct DATA for the new MEMORY IC.

SERVICING FIXTURES AND TOOLS

(For 2 heads model) VHS Alignment Tape 940-00053 (VN2S-LI63) 940-00054 (VN2S-CO13) 940-00055 (VN2S-LI63H) 940-00055 (VN2S-X63) 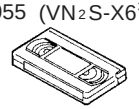	868-10007 Master Plan 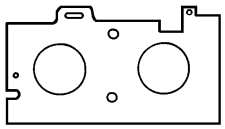	868-10004 Adapter 868-10005 Dial Torque Gauge (10~90gfꞏcm) 868-10006 (60~600gfꞏcm) 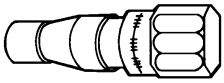	868-10008 Reel Disk Height Adjustment Jig 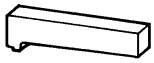
Tentelometer 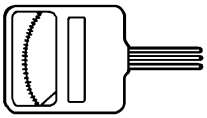			

Part No.	Remarks
940-00053	Monoscope, 6KHz **(For 2 heads model)**
940-00054	Color Bar, 1KHz **(For 2 heads model)**
940-00055	Hi-Fi Audio **(For 2 heads Hi-Fi model)**
940-00556	X Value Adjustment **(For 2 heads model)**
868-10004	VSR Torque, Brake Torque (S Reel/T Reel Ass?y)
868-10005	Brake Torque (T Reel Ass?y)
868-10006	VSR Torque, Brake Torque (S Reel)
868-10007/868-10008	Reel Disk Height Adjustment

PREPARATION FOR SERVICING

How to use the Servicing Fixture

1. Unplug the connector CP757 and CP353, then remove the TV/VCR Block from the set.
2. Remove the Operation PCB from the set, then connect it with the Syscon PCB.
   If necessary, connect CP353. (Front A/V Jack Input Terminal)
3. Short circuit between **TP1001** and **Ground** with a jumper cable.
   (Refer to MAJOR COMPONENTS LOCATION GUIDE)
4. The EOT, BOT and Reel Sensor do not work at this moment.
   At that time, the STOP/EJECT button is available to insert and eject the Cassette Tape.

PREPARATION FOR SERVICING (TVBR2542 Only)

How to use the Servicing Fixture

1. Unplug the connector CP303, CP4201 and CP4202, then remove the TV/VCR Block from the set.
2. Unplug the connector C810, CP820 and CP850, then remove the Main PCB from the VCR Block.
3. Connect as shown in the below figure using the Service Fixture.
   - Connect the Syscon PCB to the Main PCB with the cable 852-10055 and 852-10054.
   - Connect the Syscon PCB to the CRT PCB with the cable 852-10053.
4. Remove the Operation PCB from the set, then connect it with the Syscon PCB.
   If necessary, connect CP4202 (Front A/V Jack Input Terminal)
5. Short circuit between **TP1001** and **Ground** with a Jumper cable.
   (Refer to MAJOR COMPONENTS LOCATION GUIDE)
   The EOT, BOT and Reel Sensor do not work at this moment.
6. At that time, the STOP/EJECT button is available to insert and eject the Cassette Tape.

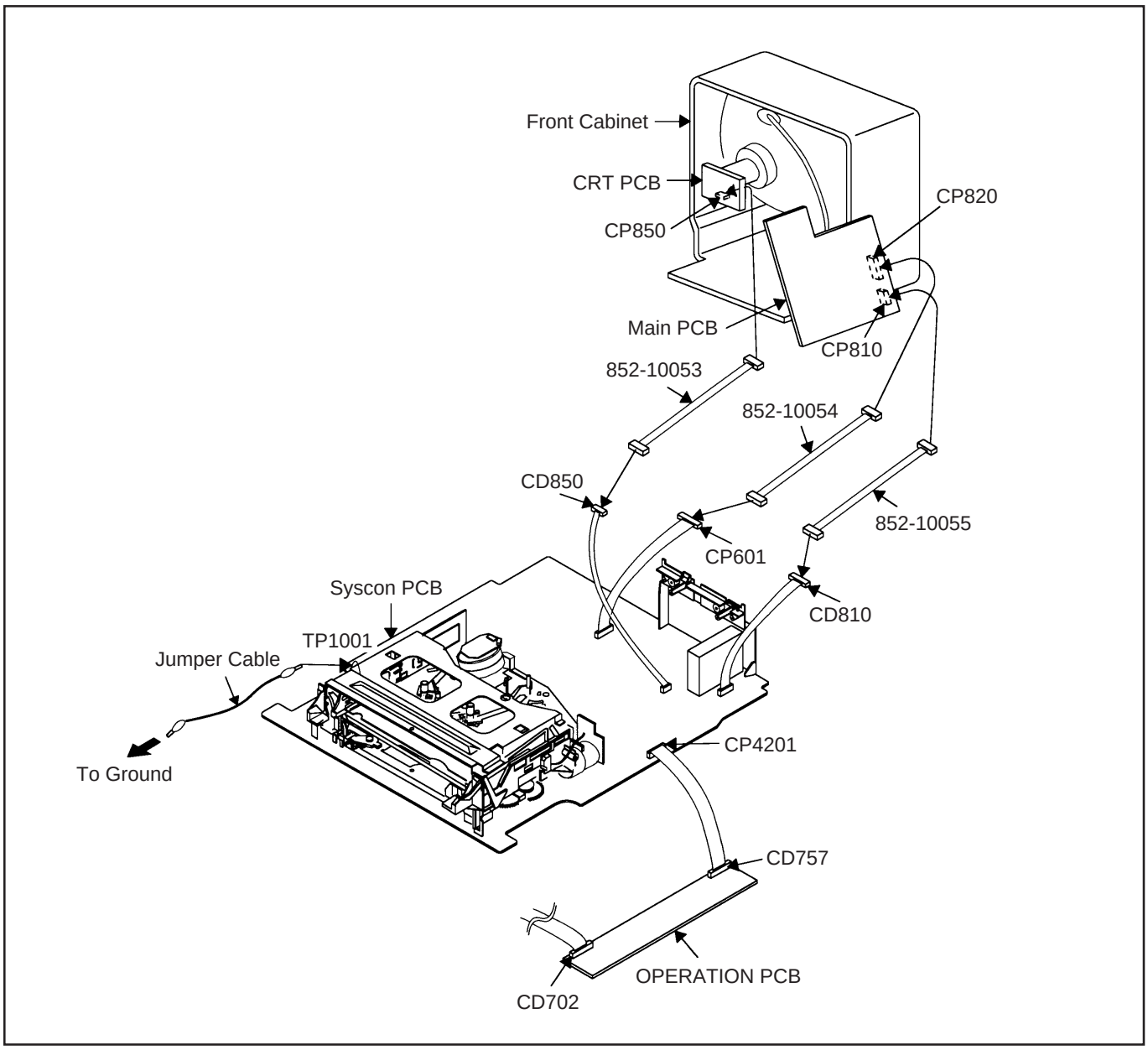

MECHANICAL ADJUSTMENTS

1. CONFIRMATION AND ADJUSTMENT

Read the following NOTES before starting work.

- Place an object which weighs between 450g~500g on the Cassette Tape to keep it steady when you want to make the tape run without the Cassette Holder. (Do not place an object which weighs over 500g.)
- When you activate the deck without the Cassette Holder, short circuit between **TP1001** and **GND**. **(Refer to ELECTRICAL ADJUSTMENT PARTS LOCATION GUIDE)** In this condition the BOT/EOT/Reel Sensor will not function.

1-1: CONFIRMATION AND ADJUSTMENT OF REEL DISK HEIGHT

1. Turn on the power and set to the STOP mode.
2. Set the master plane **868-10007** and reel disk height adjustment jig **868-10008** on the mechanism framework, taking care not to scratch the drum, as shown in **Fig. 1-1-A**.
3. Confirm that "A" of the reel disk is lower than "B" of the reel disk height adjustment jig **868-10008**, and is higher than "C". If it is not enough height, adjust to 10(+0.2, -0) mm with the height adjustment washer. See fig. 1-1-B.
4. Adjust the other reel in the same way.

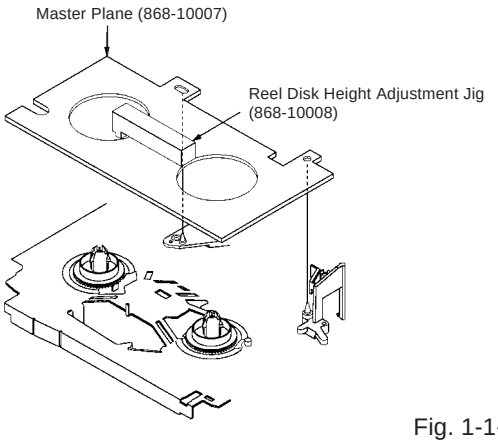

Fig. 1-1-A

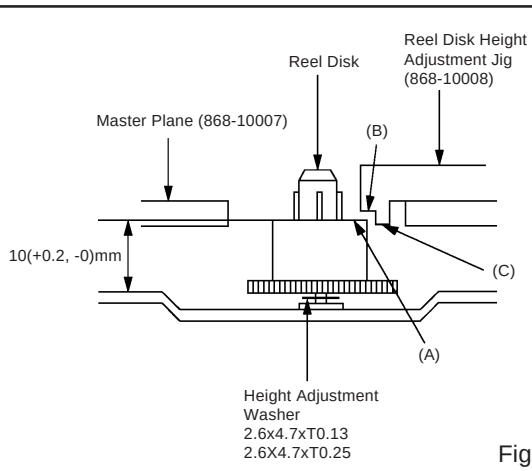

Fig. 1-1-B

1-2: CONFIRMATION AND ADJUSTMENT OF TENSION POST POSITION

1. Set to the PLAY mode.
2. Adjust the Tension Adjust until the edge of the Tension Arm is positioning within 0.5mm range from the standard line center of Main Chassis.
   After this adjustment, confirm that the cut position is located in "A" area as shown in **Fig. 1-2-B**. If it is located in "B" area, adjust again.
3. While turning the S Reel clockwise, confirm that the edge of the Tension Arm is located in the position described above.

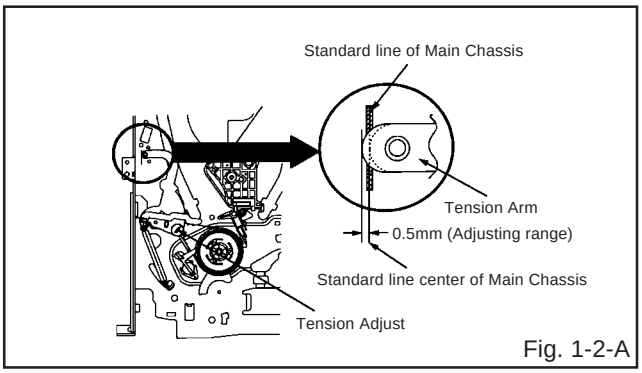

Fig. 1-2-A

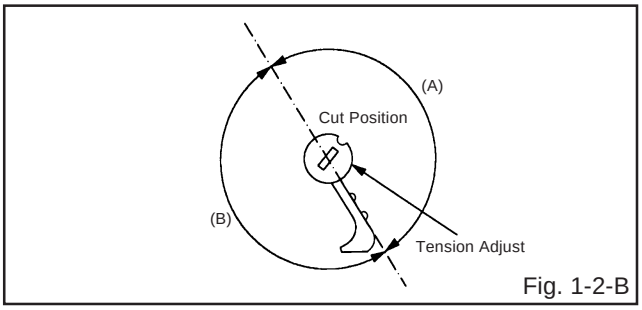

Fig. 1-2-B

1-3: CONFIRMATION OF PLAYBACK TORQUE AND BACK TENSION TORQUE DURING PLAYBACK

1. Load a video tape (T-120) recorded in standard speed mode. Set the unit to the PLAY mode.
2. Install the tentelometer as shown in **Fig. 1-3**. Confirm that the meter indicates 20 ± 2gf in the beginning of playback.

ï USING A CASSETTE TYPE TORQUE TAPE **(904-00054)**

1. After confirmation and adjustment of Tension Post position **(Refer to item 1-2)**, load the cassette type torque tape and set to the PLAY mode.
2. Confirm that the right meter of the torque tape indicates 60~110gf cm during playback in SP mode.
3. Confirm that the left meter of the torque tape indicates 25~40gf cm during playback in SP mode.

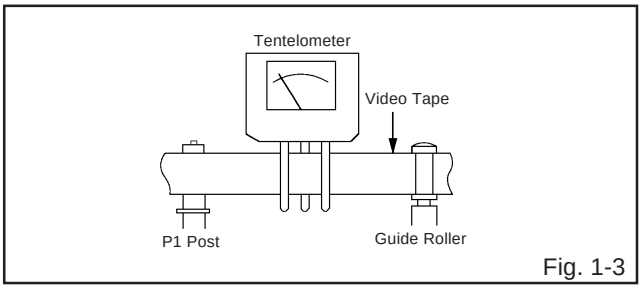

Fig. 1-3

MECHANICAL ADJUSTMENTS

1-4: CONFIRMATION OF VSR TORQUE

1. Operate within 4~5 seconds after the reel disk begins to turn.
2. Install the Torque Gauge **868-10006** and Adapter **868-10004** on the S Reel. Set to the Rewind mode. **(Refer to Fig.1-4)**
3. Then, confirm that it indicates 120~180gfï cm.

NOTE

Install the Torque Gauge on the reel disk firmly. Press the REW button to turn the reel disk.

1-5: CONFIRMATION OF REEL BRAKE TORQUE

(S Reel Brake) **(Refer to Fig. 1-4)**

1. Set to the STOP mode.
2. Move the Idler Ass'y from the S Reel.
3. Install the Torque Gauge **868-10006** and Adapter **868-10004** on the S Reel. Turn the Torque Gauge **868-10006** clockwise.
4. Then, confirm that it indicates 60~100gfï cm.

(T Reel Brake) **(Refer to Fig. 1-4)**

1. Set to the STOP mode.
2. Move the Idler Ass'y from the T Reel.
3. Install the Torque Gauge **868-10005** and Adapter **868-10004** on the T reel. Turn the Torque Gauge **868-10005** counterclockwise.
4. Then, confirm that it indicates 45~70gfï cm.

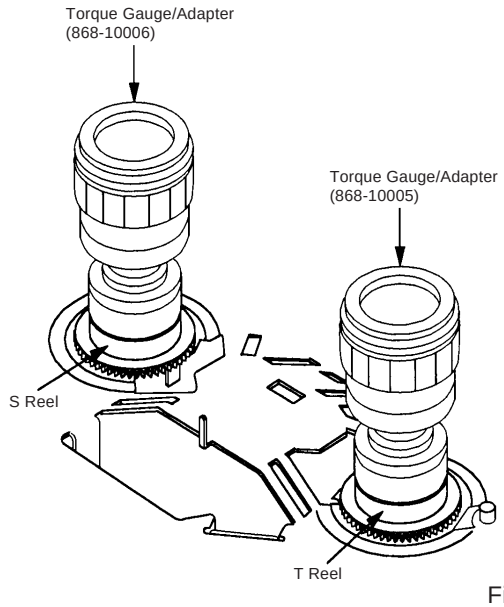

Fig. 1-4

NOTE

If the torque is out of the range, replace the following parts.

Check item	Replacement Part
1-4	Idler Ass'y/Clutch Ass'y
1-5	T Brake Spring/Tension Spring

2. CONFIRMATION AND ADJUSTMENT OF TAPE RUNNING MECHANISM

Tape Running Mechanism is adjusted precisely at the factory. Adjustment is not necessary as usual. When you replace the parts of the tape running mechanism because of long term usage or failure, the confirmation and adjustment are necessary.

2-1: GUIDE ROLLER

1. Playback the VHS Alignment Tape **940-00053** . **(Refer to SERVICING FIXTURE AND TOOLS)**
2. Connect CH-1 of the oscilloscope to **TP4001 (Envelope)** and CH-2 to **TP1002 (SW Pulse)**.
3. Press and hold the Tracking-Auto button on the remote control more than 2 seconds to set tracking to center.
4. Trigger with SW Pulse and observe the envelope. **(Refer to Fig. 2-1-A)**
5. When observing the envelope, adjust the Adjusting Driver slightly until the envelope becomes flat. Even if you press the Tracking Button, adjust so that flatness is not changed much.
6. Adjust so that the A : B ratio is better than 3 : 2 as shown in **Fig. 2-1-B**, even if you press the Tracking Button to move the envelope (The envelope waveform will begin to decrease when you press the Tracking Button).
7. Adjust the PG shifter during playback. **(Refer to the ELECTRICAL ADJUSTMENTS)**

NOTE

After adjustment, confirm and adjust A/C head. **(Refer to item 2-2)**

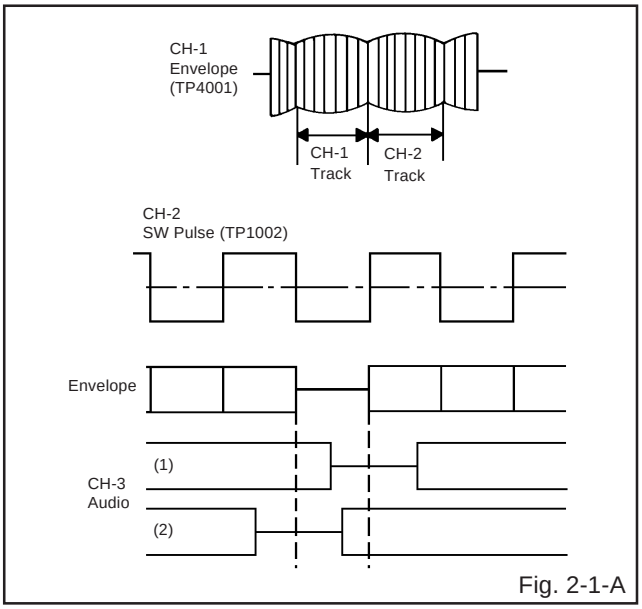

Fig. 2-1-A

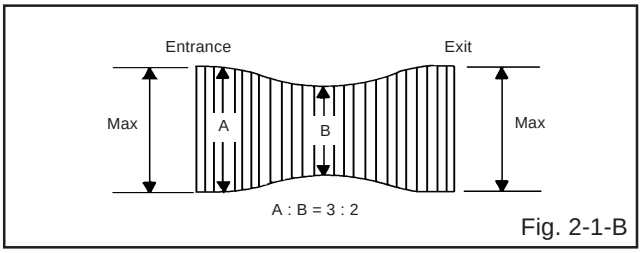

Fig. 2-1-B

MECHANICAL ADJUSTMENTS

2-2: CONFIRMATION AND ADJUSTMENT OF AUDIO/ CONTROL HEAD

When the Tape Running Mechanism does not work well, adjust the following items.

1. Playback the VHS Alignment Tape **940-00053** . **(Refer to SERVICING FIXTURE AND TOOLS)**
2. Confirm that the reflected picture of stamp mark is appears on the tape prior to P4 Post as shown in **Fig. 2-2-A**.
   a) When the reflected picture is distorted, turn the screw 1 clockwise until the distortion disappears.
   b) When the reflected picture is not distorted, turn the screw 1 counterclockwise until little distortion appears, then adjust per "a" above.
3. Turn screw 2 to set the audio level to maximum.
4. Confirm that the bottom of the Audio/ Control Head and the bottom of the tape is shown in **Fig. 2-2-C**.
   c) When the height is not correct, turn the screw 3 to adjust the height. Then, repeat steps 1~3 again.

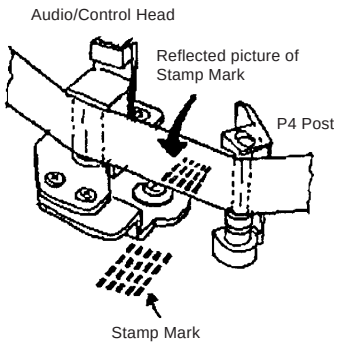

Fig. 2-2-A

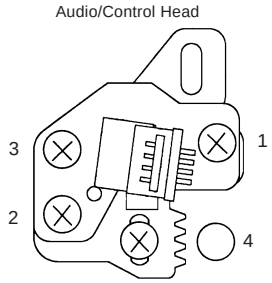

Fig. 2-2-B

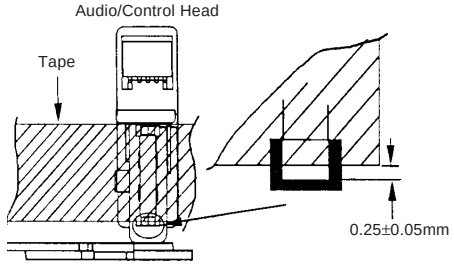

Fig. 2-2-C

2-3: TAPE RUNNING ADJUSTMENT (X VALUE ADJUSTMENT)

1. Confirm and adjust the height of the Reel Disk. **(Refer to item 1-1)**
2. Confirm and adjust the position of the Tension Post. **(Refer to item 1-2)**
3. Adjust the Guide Roller. **(Refer to item 2-1)**
4. Confirm and adjust the Audio/Control Head. **(Refer to item 2-2)**
5. Connect CH-1 of the oscilloscope to **TP4001**, CH-2 to **TP1002** and CH-3 to **HOT side of Audio Out Jack**.
6. Playback the VHS Alignment Tape **940-00556** . **(Refer to SERVICING FIXTURE AND TOOLS)**
7. Press and hold the Tracking-Auto button on the remote control more than 2 seconds to set tracking to center.
8. Set the X Value adjustment driver to the 4 of **Fig. 2-2-B**. Adjust X value so that the envelope waveform output becomes maximum. Check if the relation between Audio and Envelope waveform becomes (1) or (2) of **Fig. 2-1-A**.

2-4: CONFIRM HI-FI AUDIO (Hi-Fi model only)

1. Connect CH-1 of the oscilloscope to **TP4001**, CH-2 to **TP1002** and CH-3 to the **Hi-Fi Audio Out Jack**.
2. Playback the VHS Alignment Tape **940-00055** . **(Refer to SERVICING FIXTURE AND TOOLS)**
3. Press and hold the Tracking-Auto button on the remote control more than 2 seconds to set tracking to center.
4. Press the Tracking Up button each time count number of steps which the audio output is changed from Hi-Fi (10KHz) to MONO (6KHz).
5. Press the Tracking Down button each time count number of steps which the audio output is changed from Hi-Fi (10KHz) to MONO (6KHz).
6. Confirm that the difference between these counted steps number in the above items are within 2 steps. If the difference are more than 3 steps, do Tape Running Adjustment again. **(Repeat step 2-3 again)**

MECHANICAL ADJUSTMENTS

3. MECHANISM ADJUSTMENT PARTS LOCATION GUIDE

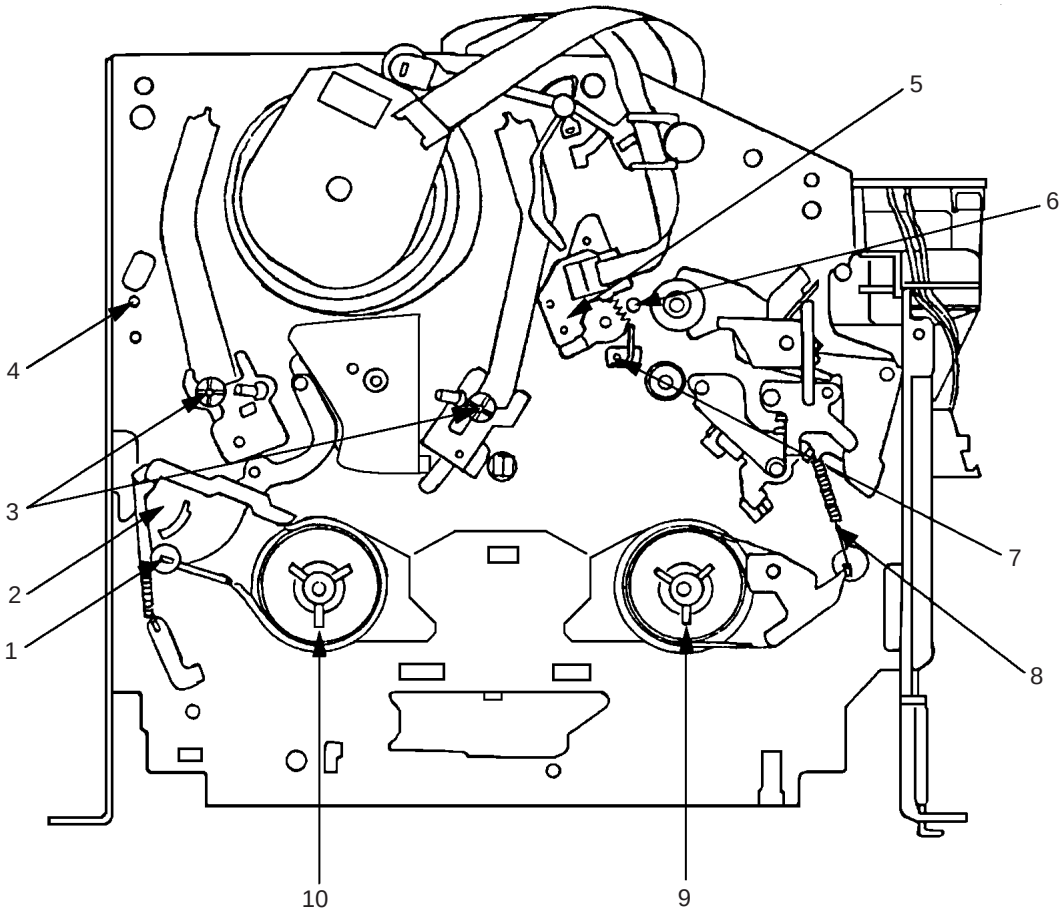

1. Tension Adjust
2. Tension Arm
3. Guide Roller
4. P1 Post
5. Audio/Control Head
6. X value adjustment driver hole
7. P4 Post
8. T Brake Spring
9. T Reel
10. S Reel

ELECTRICAL ADJUSTMENTS

1. BEFORE MAKING ELECTRICAL ADJUSTMENTS

Read and perform these adjustments when repairing the circuits or replacing electrical parts or PCB assemblies.

CAUTION

ï Use an isolation transformer when performing any service on this chassis.
ï Before removing the anode cap, discharge electricity because it contains high voltage.
ï When removing a PCB or related component, after unfastening or changing a wire, be sure to put the wire back in its original position.
Inferior silicon grease can damage IC's and transistors.

On-Screen Display Adjustment

1. Unplug the AC plug for more than 5 seconds to set the clock to the non-set state. Then, set the volume level to minimum.
2. Press the VOL. DOWN button on the set and the Channel button **(9)** on the remote control simultaneously to appear the adjustment mode on the screen as shown in **Fig. 1-1**.

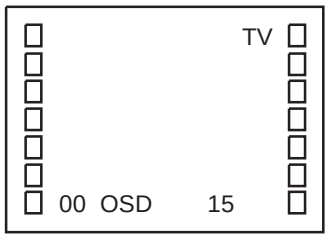

Fig. 1-1

3. Use the Channel UP/DOWN button or Channel button **(0-9)** on the remote control to select the options shown in **Fig. 1-2**.
4. Press the MENU button on the remote control to end the adjustments.

NO.	FUNCTION	NO.	FUNCTION
00	OSD H	13	BRIGHTNESS
01	CUT OFF	14	CONTRAST
02	RF AGC	15	COLOR
03	VIF VCO	16	TINT
04	H VCO	17	SHARPNESS
05	H PHASE	18	FM LEVEL
06	V SIZE	19	LEVEL
07	V SHIFT	20	SEPARATION 1
08	R DRIVE	21	SEPARATION 2
09	B DRIVE	22	TEST MONO
10	R CUT OFF	23	TEST STEREO
11	G CUT OFF	24	X-RAY TEST
12	B CUT OFF		

Fig. 1-2

2. BASIC ADJUSTMENTS (VCR SECTION)

2-1: PG SHIFTER

1. Connect CH-1 on the oscilloscope to **TP1002** and CH-2 to **pin 4 of CP1003, (TP4201 on TVBR2542Z**)
2. Playback the alignment tape. **(940-00054)**
3. Press and hold the Tracking-Auto button on the remote control more than 2 seconds to set tracking to center.
4. Press the VOL. DOWN button on the set and the channel button **(3)** on the remote control simultaneously until the indicator REC disappears. If the indicator REC disappears, adjustment is completed.

(If the above adjustments doesn't work well:)

5. Press the VOL. DOWN button on the set and the channel button **(3)** on the remote control simultaneously until the indicator REC disappears.
6. When the REC indicator is blinking, press both VOL. DOWN button on the set and the channel button **(4)** on the remote control simultaneously and adjust the Tracking +/- button until the arising to the down of Head Switching Pulse becomes 6.5 ± 0.5H.
(Refer to Fig. 2-1-A, B)
7. Press the Tracking Auto button.

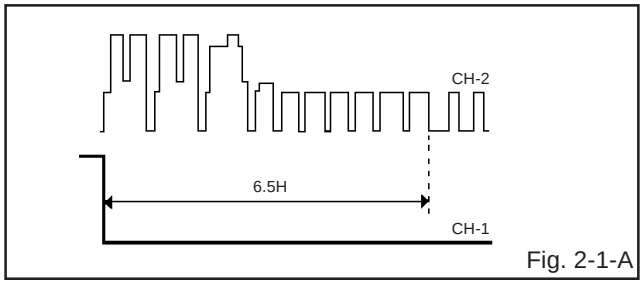

Fig. 2-1-A

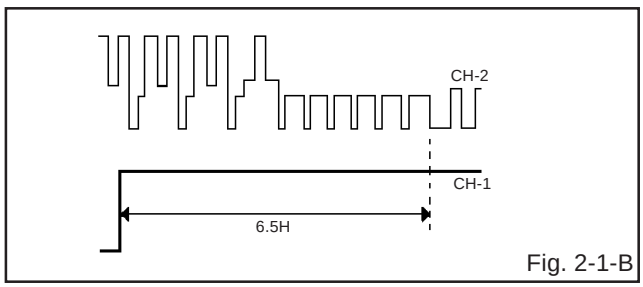

Fig. 2-1-B

2-2: VCO FREERUN

1. Place the set with Aging Test for more than 10 minutes.
2. Receive the VHF HIGH.
3. Disconnect the Antenna while receiving the VHF HIGH and set to the Noise screen.
4. Once turn off the Power and turn on the Power again.
5. Approxi. 3 seconds later, input the Antenna again.
6. For TVBR13/1942Z connect the digital voltmeter between **the pin 5 of CP351** and the **pin 1 (GND) of CP351**.
For TVBR2542Z connect the digital voltmeter between **the pin 7 of CP602** and the **pin 1 (GND) of CP602**.
7. Activate the adjustment mode display of **Fig. 1-1** and press the channel button **(03)** on the remote control to select "VIF VCO".
8. Press the VOL. UP/DOWN button on the remote control until the digital voltmeter is 2.5 ± 0.5V.

ELECTRICAL ADJUSTMENTS

2-3: RF AGC

1. Receive an 70dB monoscope pattern.
2. On TVBR13/1942Z connect the digital voltmeter between **pin 5 of CP351** and **pin 1 (GND) of CP351.**
   On TVBR2542Z connect the digital voltmeter between **pin 7 of CP602** and **pin 1 (GND) of CP602.**
3. Activate the adjustment mode display of **Fig. 1-1** and press the channel button **(02)** on the remote control to select "RF AGC".
4. Press the VOL. UP/DOWN button on the remote control until the digital voltmeter is 2.4 ± 0.05V.

(TV SECTION)

2-4: CONSTANT VOLTAGE

1. On TVBR 13/1942Z connect the digital voltmeter to the **FUSE HOLDER of FH503 (13") and FH502 (19").**
   On TVBR2542Z use the remote control to set the brightness and contrast. Then connect digital volt meter to TP401
2. Set condition is AV MODE without signal.
3. Adjust the **VR502** until the digital voltmeter is 135 ± 0.5V on TVBR13/1942Z and 130 ± 0.5V on TVBR2542Z.

2-5: CUT OFF

1. Adjust the unit to the following settings.
   R CUT OFF=64, G CUT OFF=64, B CUT OFF=64, BRIGHTNESS=128, CONTRAST=64
2. Place the set with Aging Test for more than 15 minutes.
3. Set condition is AV MODE without signal.
4. Activate the adjustment mode display of **Fig. 1-1** and press the channel button **(01)** on the remote control to select "CUT OFF".
5. Adjust the **Screen Volume** until a dim raster is obtained.

2-6: WHITE BALANCE

NOTE: Adjust after performing CUT OFF adjustment.

1. Place the set with Aging Test for more than 15 minutes.
2. Receive the color bar pattern.
3. Using the remote control, set the brightness and contrast to normal position.
4. Activate the adjustment mode display of **Fig. 1-1** and press the channel button **(10)** on the remote control to select "R CUT OFF" on TVBR13/1942Z and "R BIAS" on TVBR2542Z.
5. Using the VOL. UP/DOWN button on the remote control, to adjust the 'R CUT OFF" or "R BIAS".
6. Press the CH. UP/DOWN button on the remote control to select the "R DRIVE", "B DRIVE", "G CUT OFF" or "B CUT OFF" on TVBR13/1942Z.
   Press the CH. UP/DOWN button on the remote control to select the "R DRIVE", "B DRIVE", "G.BIAS" or "B.BIAS on TVBR2542Z.
7. Using the VOL. UP/DOWN button on the remote control, adjust the R DRIVE, B DRIVE, G CUT OFF or B CUT OFF. on TVBR13/1942Z..
   Using the VOL. UP/DOWN button on the remote control, to adjust the "R DRIVE", "B DRIVE", "G.BIAS" or "B.BIAS on TVBR2542Z.
8. Perform the above adjustments 6 and 7 until the white color is looked like a white.

2-7: FOCUS

1. Receive the monoscope pattern.
2. Turn the Focus Volume fully counterclockwise once.
3. Adjust the **Focus Volume** until picture is distinct.

2-8: HORIZONTAL PHASE

1. Receive the center cross signal from the Pattern Generator.
2. Activate the adjustment mode display of **Fig. 1-1** and press the channel button **(05)** on the remote control to select "H PHASE".
3. Press the VOL. UP/DOWN button on the remote control until the vertical line becomes fit to the notch of the shadow mask.

2-9: VERTICAL SHIFT

1. Receive the center cross signal from the Pattern Generator.
2. Activate the adjustment mode display of **Fig. 1-1** and press the channel button **(07)** on the remote control to select "V SHIFT".
3. Press the VOL. UP/DOWN button on the remote control until the horizontal line becomes fit to the notch of the shadow mask.

2-10: VERTICAL SIZE

1. Receive the cross hatch signal from the Pattern Generator.
2. Activate the adjustment mode display of **Fig. 1-1** and press the channel button **(06)** on the remote control to select "V SIZE".
3. Press the VOL. UP/DOWN button on the remote control until the rectangle on the center of the screen becomes square.
4. Receive a broadcast and check if the picture is normal.

2-11: SUB BRIGHTNESS

1. Receive the black pattern*. (RF Input)
2. Activate the adjustment mode display of **Fig. 1-1** and press the channel button **(13)** on the remote control to select "BRIGHTNESS".
3. Press the VOL. UP/DOWN button on the remote control until the screen begin to shine.
4. Receive the black pattern*. (Audio Video Input)
5. Press the INPUT SELECT button on the remote control to set to the AV mode. Then perform the above adjustments 2~3.

*The Black Pattern means the whole black raster signal. Select the "RASTER" of the pattern generator, set to the OFF position for each R, G and B.

2-12: SUB CONTRAST (For TVBR13/1942Z Only)

1. Activate the adjustment mode display of **Fig. 1-1** and press the channel button **(14)** on the remote control to select "CONTRAST".
2. Press the VOL. UP/DOWN button on the remote control until the contrast step No. becomes "100"
3. Press the INPUT SELECT button on the remote control to set to the AV mode. Then perform the above adjustments 1~2.

ELECTRICAL ADJUSTMENTS

2-12: SUB CONTRAST (For TVBR2542Z Only)

1. Activate the adjustment mode display of **Fig. 1-1** and press the channel button **(14)** on the remote control to select "CONTRAST".
2. Press the VOL. UP/DOWN button on the remote control until the white color level is adjusted to 300 ± 10NIT.
3. Press the INPUT SELECT button on the remote control to set to the AV mode.
4. Activate the adjustment mode display of **Fig. 1-1** and press the channel button **(14)** on the remote control.
5. Press the VOL. UP/DOWN button on the remote control until the white color level is adjusted to 200 ± 10NIT.
6. Receive the color bar pattern. (Audio Video Input) Press the AV button on the remote control to set to the AV mode. Then perform the above adjustments 2~5.

2-13: SUB TINT (For 13/1942Z Only)

1. Receive the color bar pattern. (RF Input)
2. Connect the synchro scope to **TP803**.
3. Activate the adjustment mode display of **Fig. 1-1** and press the channel button **(16)** on the remote control to select "TINT".
4. Press the VOL. UP/DOWN button on the remote control until the waveform becomes as shown in **Fig. 2-2**.
5. Receive the color bar pattern. (Audio Video Input)
6. Press the INPUT SELECT button on the remote control to set to the AV mode. Then perform the above adjustments 2~4.

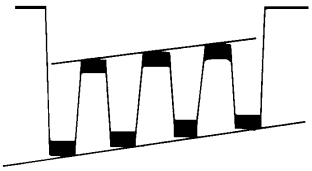

Fig. 2-2

2-13: SUB TINT/SUB COLOR (For TVBR2542Z Only)

1. Receive the color bar pattern. (RF Input)
2. Connect the synchro scope to **CP602**.
3. Activate the adjustment mode display of **Fig. 1-1** and press the channel button **(16)** on the remote control to select "TINT".
4. Press the VOL. UP/DOWN button on the remote control until the waveform becomes as shown in **Fig. 2-2**.
5. Press the CH DOWN button **(15)** on the remote control to select "COLOR".
6. Press the VOL. UP/DOWN button on the remote control until the red color level is adjusted to 110% of the white level. **(Refer to Fig. 2-3)**
7. Receive the color bar pattern. (Audio Video Input)
8. Press the INPUT SELECT button on the remote control to set to the AV mode. Then perform the above adjustments 2~6.

2-14: SUB COLOR (TVBR13/1942Z Only)

1. Receive the color bar pattern. (RF Input)
2. Connect the synchro scope to **TP801**.
3. Activate the adjustment mode display of **Fig. 1-1** and press the channel button **(15)** on the remote control to select "COLOR".
4. Press the VOL. UP/DOWN button on the remote control until the red color level is adjusted to 110% of the white level. **(Refer to Fig. 2-3)**
5. Receive the color bar pattern. (Audio Video Input)
6. Press the INPUT SELECT button on the remote control to set to the AV mode. Then perform the above adjustments 2~4.

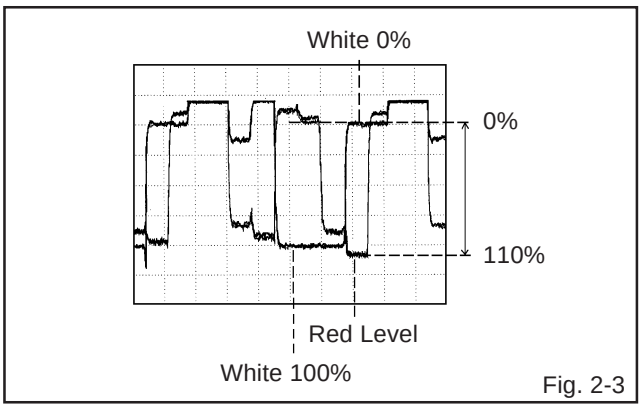

Fig. 2-3

2-15: OSD HORIZONTAL

1. Activate the adjustment mode display of **Fig. 1-1**.
2. Press the VOL. UP/DOWN button on the remote control until the difference of A and B becomes minimum. **(Refer to Fig. 2-4)**

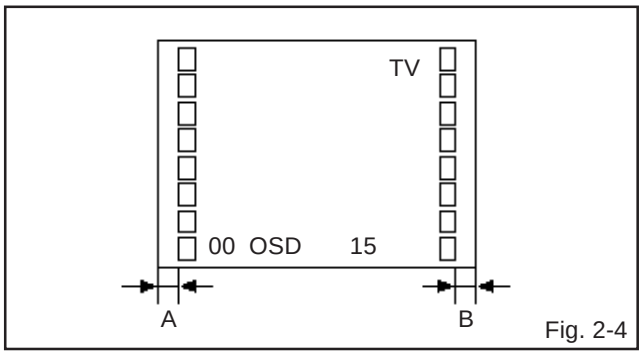

Fig. 2-4

TVBR 13/1942Z ELECTRICAL ADJUSTMENTS

3. ELECTRICAL ADJUSTMENT PARTS LOCATION GUIDE

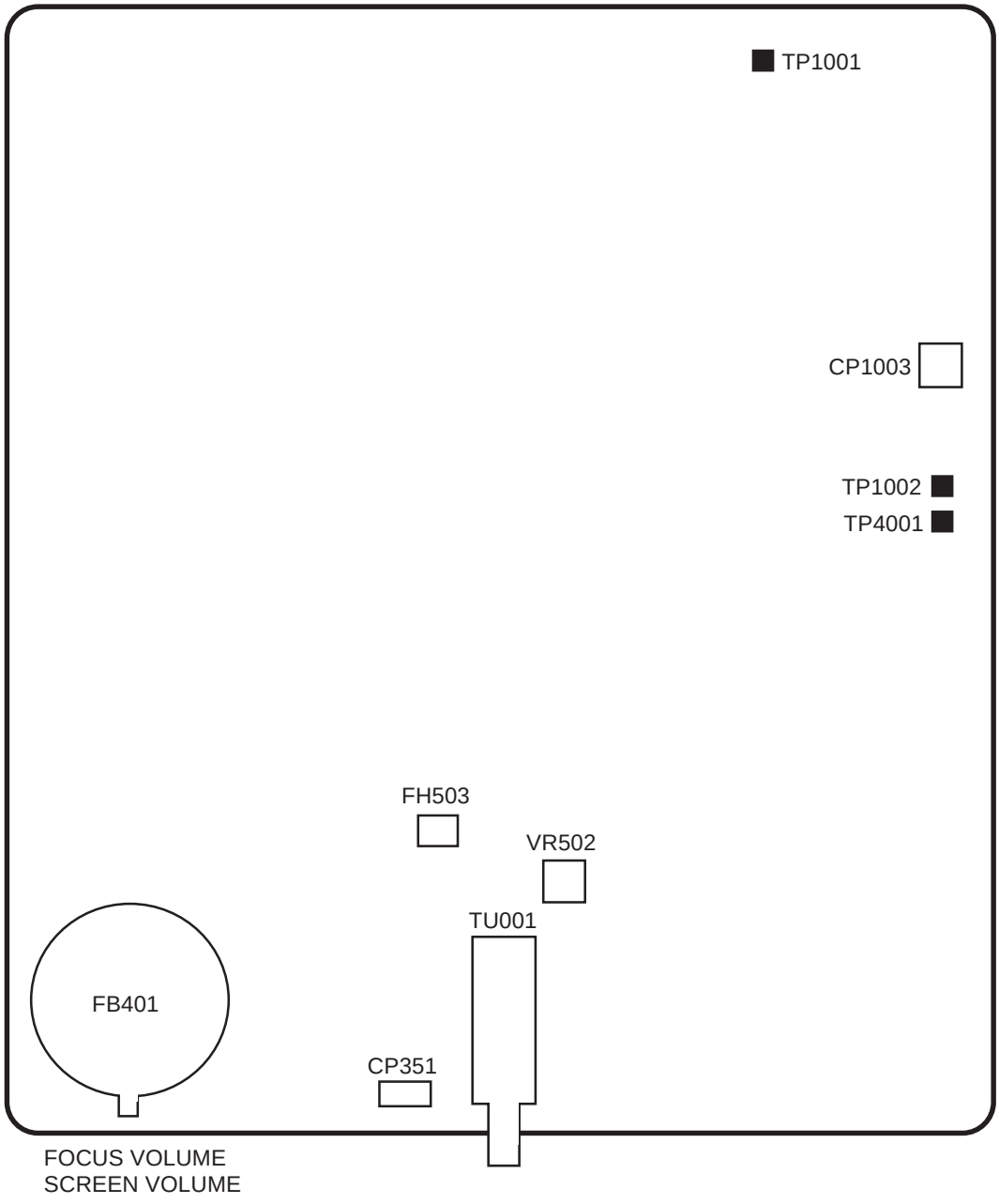

SYSCON

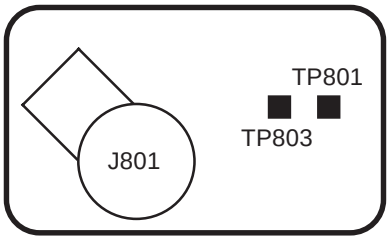

CRT

TVBR 2542Z ELECTRICAL ADJUSTMENTS

3. ELECTRICAL ADJUSTMENT PARTS LOCATION GUIDE (VCR SECTION)

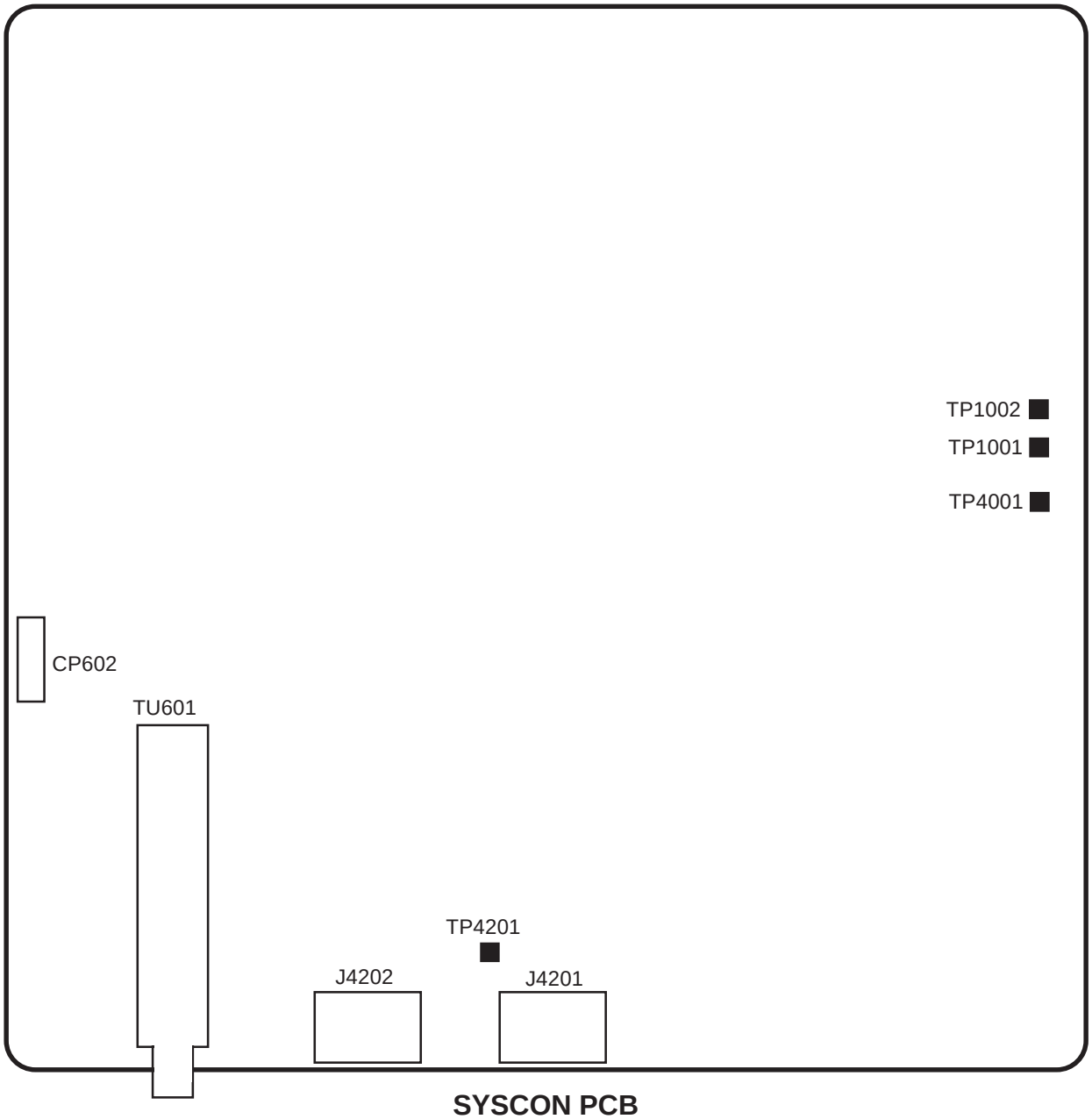

SYSCON PCB

TVBR 2542ZELECTRICAL ADJUSTMENTS

(TV SECTION)

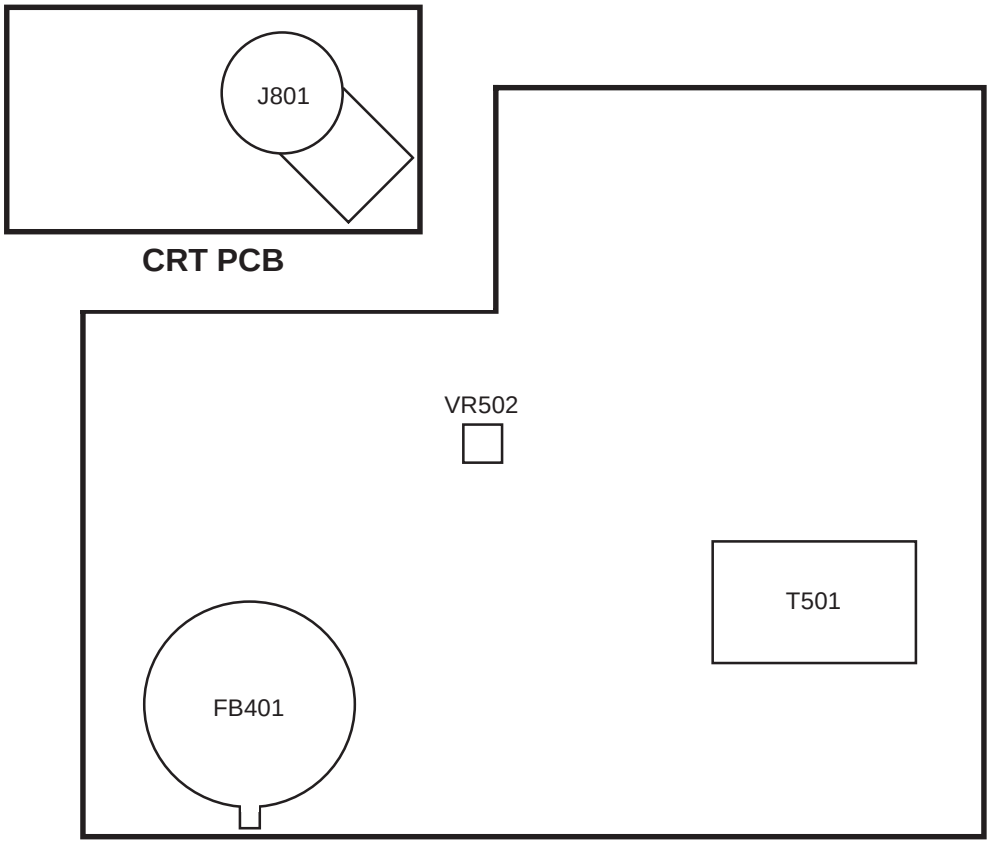

ELECTRICAL ADJUSTMENTS

4. PURITY AND CONVERGENCE ADJUSTMENTS

NOTE

1. Turn the unit on and let it warm up for at least 30 minutes before performing the following adjustments.
2. Place the CRT surface facing east or west to reduce the terrestrial magnetism.
3. Turn ON the unit and demagnetize with a Degauss Coil.

4-1: STATIC CONVERGENCE (ROUGH ADJUSTMENT)

1. Tighten the screw for the magnet. Refer to the adjusted CRT for the position. **(Refer to Fig. 4-1)**
   If the deflection yoke and magnet are in one body, untighten the screw for the body.
2. Receive the green raster pattern from the color bar generator.
3. Slide the deflection yoke until it touches the funnel side of the CRT.
4. Adjust center of screen to green, with red and blue on the sides, using the pair of purity magnets.
5. Switch the color bar generator from the green raster pattern to the crosshatch pattern.
6. Combine red and blue of the 3 color crosshatch pattern on the center of the screen by adjusting the pair of 4 pole magnets.
7. Combine red/blue (magenta) and green by adjusting the pair of 6 pole magnets.
8. Adjust the crosshatch pattern to change to white by repeating steps 6 and 7.

4-2: PURITY

NOTE

Adjust after performing adjustments in section 4-1.

1. Receive the green raster pattern from color bar generator.
2. Adjust the pair of purity magnets to center the color on the screen.
   Adjust the pair of purity magnets so the color at the ends are equally wide.
3. Move the deflection yoke backward (to neck side) slowly, and stop it at the position when the whole screen is green.
4. Confirm red and blue colors.
5. Adjust the slant of the deflection yoke while watching the screen, then tighten the fixing screw.

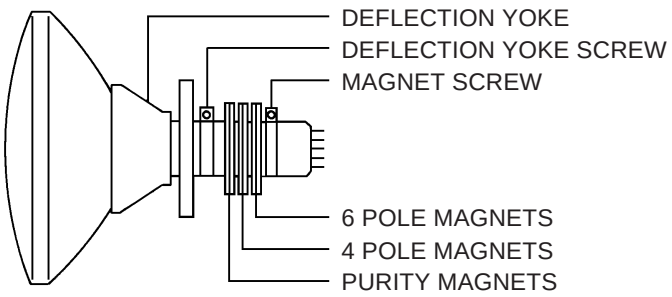

Fig. 4-1

4-3: STATIC CONVERGENCE

NOTE

Adjust after performing adjustments in section 4-2.

1. Receive the crosshatch pattern from the color bar generator.
2. Combine red and blue of the 3 color crosshatch pattern on the center of the screen by adjusting the pair of 4 pole magnets.
3. Combine red/blue (magenta) and green by adjusting the pair of 6 pole magnets.

4-4: DYNAMIC CONVERGENCE

NOTE

Adjust after performing adjustments in section 4-3.

1. Adjust the differences around the screen by moving the deflection yoke upward/downward and right/left.
   (Refer to Fig. 4-2-a)
2. Insert three wedges between the deflection yoke and CRT funnel to fix the deflection yoke.
   (Refer to Fig. 4-2-b)

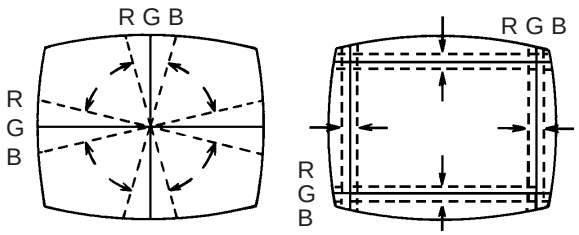

UPWARD/DOWNWARD SLANT RIGHT/LEFT SLANT

Fig. 4-2-a

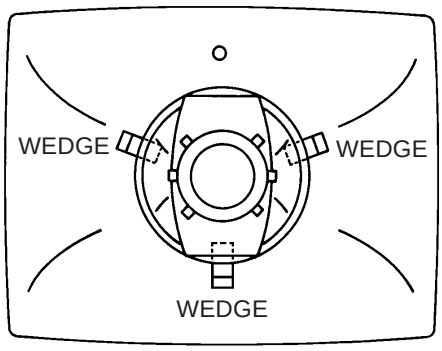

WEDGE POSITION

Fig. 4-2-b

COMPONENT PARTS LIST REFERENCE CHART

The following Models in the Reference Chart are Component level repair only. Refer to the chart and Model Identifier to use the Component parts list.

Notes: The following information is for Models in and out of warranty.

KEY	
MODEL	INDENTIFIER
TVBR1342Z	A
TVBR1942Z	B
TVBR2542Z	C

To Order Parts: voice 1-888-3-ZENITH

fax 1-888-6-ZENITH

Address: ZENITH NATIONAL PARTS
SALES AND DISTRIBUTION CENTER
P O Box 240007
Huntsville, AL 35824-6407

COMPONENT PARTS LIST

SEE REFERENCE CHART ON PAGE 1

NOTE: This list will enable you to easily determine the parts used on each Model, Chassis, or Assembly.

RC	LOC	PART#	DESC
AB	—-	206-03641	INSTRUCTION BOOK
A	101	857-10351	CABINET, FRONT ASS'Y
B	101	857-10352	CABINET, FRONT ASS'Y
C	___	857-10357	CABINET, FRONT ASS'Y
C	101	857-10358	PANEL ASS'Y
A	102	857-10341	CABINET, FRONT
B	102	857-10342	CABINET, FRONT
C	102	857-10340	CABINET, FRONT
A	103	857-10344	PLATE, FRONT
B	103	857-10261	PLATE, FRONT
C	103	857-10343	PLATE, FRONT
ABC	104	NSP	SHEET, LED
ABC	105	843-10035	GUIDE, REMOCON
A	106	828-10096	DOOR
B	106	828-10097	DOOR
C	106	828-10098	DOOR
ABC	107	NSP	SPRING, DOOR
A	108	959-10106	BUTTON, FRAME
B	108	959-10092	BUTTON, FRAME
C	108	959-10105	BUTTON, FRAME
C	109	841-10116	HOLDER, PCB
A	110	883-10022	CUSHION
BC	110	883-10017	CUSHION
ABC	111	857-10264	PLATE, SPEAKER
ABC	112	882-10015	SPRING, EARTH
A	113	NSP	SHEET, RATING
A	115	883-10019	CUSHION, SPEAKER
AB	117	841-10117	HOLDER, DECK
C	117	804-10095	HOLDER, DECK
AB	118	857-10257	PLATE, EARTH-SYSCON
C	118	857-10349	PLATE, EARTH SYSCON
A	119	926-10056	SHIELD, CASE HEAD AMP ASS'Y
BC	119	926-10057	SHIELD, CASE HEAD AMP ASS'Y
AB	120	857-10346	PLATE, DECK SHIELD
C	120	857-10356	PLATE, DECK SHIELD
A	121	814-10164	CABINET, BACK
B	121	814-10163	CABINET, BACK
C	121	814-10162	CABINET, BACK
B	122	NSP	SHEET, RATING
ABC	123	841-10120	HOLDER, EOT SENSOR
AB	124	857-10348	PLATE, BOTTOM-EARTH
AB	125	926-10058	SHIELD, BOTTOM
C	126	NSP	SHEET, CAUTION
A	126	883-10020	CUSHION
B	126	NSP	CUSHION
A	127	883-10021	CUSHION
B	127	NSP	CUSHION
C	127	947-10005	PUSH SPACAP, ALUMI ELECTROR
AB	128	926-10059	SHIELD, COVER HEAD AMP
C	128	841-10121	HOLDER, CRT WIRE
ABC	129	819-10002	CORD CLIP UL CO.
AB	130	857-10347	PLATE, SI-STEEL-2
C	131	857-10355	PANEL, FRONT
C	132	814-10165	PLATE, JACK
C	133	841-10092	HOLDER, FBT
C	134	841-10118	HOLDER, CRT WIRE

RC	LOC	PART#	DESC
B	201	NSP	SCREW, TAP TITE (P) BRAZIER
AC	201	NSP	SCREW, TAPPING (B0) TRUSS
C	202	NSP	SCREW, TAP TITE (S) BRAZIER
B	202	NSP	SCREW, TAP TITE (P) BRAZIER
A	202	NSP	SCREW, TAPPING (B0) TRUSS
A	203	NSP	SCREW, TAP TITE (P) BRAZIER
C	203	NSP	SCREW, TAPPING (B0) PAN
B	203	NSP	SCREW, TAPPING (B0) GW20
B	204	NSP	SCREW/WASHER (A)
C	204	NSP	SCREW, TAP TITE (P) BRAZIER
A	204	NSP	SCREW, TAPPING (B0) GW20
B	205	NSP	SCREW, TAP TITE (B) BRAZIER
AC	205	NSP	SCREW, TAP TITE (P) BRAZIER
A	206	NSP	SCREW/WASHER (A)
B	206	NSP	SCREW, TAP TITE (P) FLAT
C	206	NSP	SCREW, TAP TITE (P) BRAZIER
A	207	NSP	SCREW, TAP TITE (B) BRAZIER
C	207	NSP	SCREW, TAP TITE (P) BIND
B	207	NSP	SCREW, TAPPING (B0) TRUSS
AC	208	NSP	SCREW, TAP TITE (P) FLAT
B	208	NSP	SCREW, TAPPING (B0) PAN
AC	209	NSP	SCREW, TAP TITE (P) BRAZIER
B	209	NSP	SCREW, TAPPING (B0) TRUSS
A	210	NSP	SCREW, TAPPING (B0) PAN
B	210	NSP	SCREW, TAPPING (B0) TRUSS
C	210	NSP	WASHER
C	211	NSP	SCREW, TAP TITE (S) BIND
A	211	NSP	SCREW, TAP TITE (S) BRAZIER
B	211	NSP	SCREW, TAP TITE (P) BRAZIER
B	212	NSP	SCREW, TAP TITE (S) BRAZIER
C	212	NSP	SCREW, TAP TITE (B) BRAZIER
A	212	NSP	SCREW, TAPPING (B0) TRUSS
B	213	NSP	SCREW, TAP TITE (S) BIND
C	213	NSP	SCREW/WASHER (A)
B	214	NSP	SCREW, TAP TITE (B) WH7
C	214	NSP	NUT
C	215	NSP	SCREW/WASHER (A)
C	216	NSP	SCREW, TAPPING (A) GW22
C	217	NSP	SCREW/WASHER (B)
AB	300	969-10013	DECK ASSY A545A0A420A
C	300	969-10014	DECK ASSY A545B5P420A
ABC	301	800-10039	AHC ASS'Y
ABC	302	832-10023	BELT, CAPSTAN (S)
ABC	303	917-10070	LEVER, REC
ABC	304	804-10052	BASE, AC HEAD
ABC	305	NSP	SPRING, AC HEAD
ABC	306	804-10092	MAIN CHASSIS ASS'Y (S-Z)
ABC	307	861-10035	CLUTCH ASS'Y(S2)
ABC	308	861-10034	ARM, IDLER ASS'Y (S)
ABC	309	818-10038	ARM, SS BRAKE (S)
ABC	310	861-10038	REEL, T (S)
ABC	311	917-10043	LOADING ARM S ASS'Y
ABC	312	917-10044	LOADING ARM T ASS'Y
ABC	313	843-10057	GUIDE ROLLER ASS'Y
ABC	314	804-10093	BASE, INCL S ASS'Y
ABC	315	804-10094	BASE, INCL T(S) ASS'Y

Critical safety components are identified by shading. Replace only with part numbers specified.

COMPONENT PARTS LIST

SEE REFERENCE CHART ON PAGE 1

NOTE: This list will enable you to easily determine the parts used on each Model, Chassis, or Assembly.

RC	LOC	PART#	DESC
ABC	316	917-10067	P5-3 ARM ASS'Y(S)
ABC	317	866-10023	PINCH ROLLER BLOCK
ABC	318	917-10046	TENSION ARM ASS'Y
ABC	319	832-10022	TENSION BAND ASS'Y (S)
ABC	320	866-10018	PINCH ROLLER LEVER ASS'Y
AB	321	818-10036	BRAKE T ASS'Y (S)
C	321	818-10039	BRAKE T ASSY(S)
ABC	322	818-10037	CAP BRAKE ASS'Y(S)
ABC	323	918-10003	LINK ASS'Y
ABC	324	918-10004	LINK LEVER ASS'Y
ABC	325	917-10068	LEVER, CLUTCH (S)
ABC	326	861-10036	ACTUATOR, CLUTCH
ABC	327	834-10108	GEAR, COUPLING(S2)
ABC	328	861-10037	REEL, S (S)
ABC	329	834-10081	WORM
ABC	330	812-10140	BRACKET, MOTOR
ABC	331	834-10072	GEAR, MAIN LOADING
ABC	332	834-10073	GEAR, LOADING S
ABC	333	834-10074	GEAR, LOADING T
AB	334	841-10119	HOLDER, LOADING GEAR
C	334	841-10123	HOLDER, LOADING GEAR (S-Z)
ABC	335	917-10048	ADJUST, TENSION
ABC	336	841-10089	HOLDER, TENSION
ABC	337	917-10069	LEVER, TENSION
ABC	338	824-10093	COVER, P4
ABC	339	834-10075	GEAR, JOINT
ABC	340	834-10076	GEAR, MIDDLE
ABC	341	834-10109	CAM, MAIN (S)
ABC	342	834-10078	CAM, P5
ABC	343	834-10110	CAM, PINCH ROLLER
ABC	344	865-10003	ROD, MAIN(S)
ABC	345	998-10003	REFLECTOR, LED
ABC	346	NSP	SPRING, LOADING GEAR
ABC	347	NSP	SPRING, P5 (S)
ABC	348	NSP	SPRING, BRAKE T (S)
ABC	349	NSP	SPRING, TENSION
ABC	350	NSP	SPRING, CAP BRAKE (S)
ABC	351	NSP	SPRING, LOCKER (S)
ABC	352	NSP	SPRING, LINK
ABC	353	NSP	SPRING, DAMPER
ABC	354	NSP	SPRING, RING
ABC	355	NSP	SPRING, SS BRAKE (S)
ABC	356	843-00221	OPENER, CASS
AB	357	969-10012	CASS, SIDE L
C	357	843-10061	CASS SIDE L
AB	358	969-10007	CASS, SIDE R
C	358	843-10062	CASS SIDE R
AB	359	843-10058	TAPE GUIDE L (P, R)
C	359	843-10059	TAPE GUIDE L(P, R)
AB	360	843-10041	TAPE GUIDE R
C	360	843-10060	TAPE GUIDE R
ABC	361	824-10098	COVER, SENSOR L3
ABC	362	917-10050	LEVER, FLAP
ABC	363	841-10090	CASS HOLDER
ABC	364	834-10080	DRIVER, WORM
ABC	365	956-10008	LOCKER, R2

RC	LOC	PART#	DESC
ABC	366	NSP	SPRING, PACK
ABC	367	812-10096	BRACKET, TOP
ABC	368	882-10010	SPRING, CASS EARTH
ABC	369	NSP	SPRING, P/R ARM
ABC	501	NSP	SCREW, TAP TITE(S) PAN 2.6x10
ABC	502	NSP	SCREW, TAP TITE(S) BIND 2.6x8
ABC	503	NSP	SCREW, TAP TITE(S) BIND 2.6x6
ABC	504	NSP	SCREW, TAP TITE(B) PAN 2.6x6
ABC	505	NSP	SCREW/WASHER(A) M2.6x8
ABC	506	NSP	SCREW/WASHER(B) M2.6x4
ABC	507	NSP	SCREW, PAN M2x6
ABC	508	NSP	SCREW, PAN M2x3
ABC	509	NSP	SCREW, PAN M3.0x3.0
ABC	510	NSP	SEMS A M2.3x5.0
ABC	511	NSP	POLYSLIDER WASHER(CUT) 2.6x6.0xT0.5
ABC	512	NSP	POLYSLIDER WASHER 2.6x4.7xT0.25
ABC	513	NSP	POLYSLIDER WASHER(CUT) 1.8x4.5xT0.5
ABC	514	819-10003	E-RING 3.0
ABC	515	NSP	SCREW/WASHER(A) M2.6x5
A	ANT001	801-10008	ANTENNA, ROD T4-216BNK-BK
C	B301	NSP	CORE, BEADS BL01RN1-A63T6
AB	B402	NSP	CORE, BEADS BL01RN1-A63T6
AB	B403	NSP	CORE, BEADS BL01RN1-A63T6
B	B405	NSP	CORE, BEADS BL01RN1-A63T6
AB	B4201	NSP	CORE, BEADS BL02RN1-R62T2
ABC	B502	NSP	CORE, BEADS BL02RN2-R62T4
AB	B503	NSP	CORE, BEADS BL01RN1-A63T6
C	B504	NSP	CORE, BEADS BL01RN1-A63T6
ABC	B505	NSP	CORE, BEADS BL02RN2-R62T4
C	B601	NSP	CORE, BEADS BL02RN1-R62T2
AB	B602	NSP	CORE, BEADS BL02RN1-R62T2
C	B602	NSP	CORE, BEADS BL01RN1-A63T6
AB	C1001	822-11444	CAP, ALUMI ELECTRO 100 UF 25V
C	C1001	822-11119	CAP, ALUMI ELECTRO 100 UF 25V
AB	C1002	822-11321	CAP, CERAMIC 0.001 UF 25V
C	C1002	822-10444	CAP, CERAMIC 0.001 UF 50V
ABC	C1003	822-11326	CAP, ALUMI ELECTRO 1000 UF 6.3V
AB	C1004	822-11418	CAP, CERAMIC 100 PF 50V
C	C1004	822-10388	CAP, CERAMIC 1 UF 16V
AB	C1005	822-11321	CAP, CERAMIC 0.001 UF 25V
C	C1005	822-10444	CAP, CERAMIC 0.001 UF 50V
C	C1006	822-11418	CAP, CERAMIC 100 PF 50V
C	C1008	822-11418	CAP, CERAMIC 100 PF 50V
ABC	C1009	822-11486	CAP, CERAMIC 220 PF 50V
ABC	C1010	822-11486	CAP, CERAMIC 220 PF 50V
ABC	C1013	822-10441	CAP, CERAMIC 0.0039UF 50V
ABC	C1014	822-10443	CAP, CERAMIC 0.1 UF 50V
ABC	C1015	822-10395	CAP, ALUMI ELECTRO 47 UF 10V
ABC	C1016	822-11458	CAP, ALUMI ELECTRO 22 UF 16V
ABC	C1017	822-10400	CAP, CERAMIC 0.1 UF 25V
ABC	C1018	822-11461	CAP, ALUMI ELECTRO 4.7 UF 50V
ABC	C1019	822-11419	CAP, CERAMIC 0.001 UF 50V
ABC	C1020	822-11332	CAP, ALUMI ELECTRO 10 UF 16V
ABC	C1021	822-11459	CAP, ALUMI ELECTRO 33 UF 16V
ABC	C1022	822-10400	CAP, CERAMIC 0.1 UF 25V
ABC	C1023	822-11486	CAP, CERAMIC 220 PF 50V

Critical safety components are identified by shading. Replace only with part numbers specified.

COMPONENT PARTS LIST

SEE REFERENCE CHART ON PAGE 1

NOTE: This list will enable you to easily determine the parts used on each Model, Chassis, or Assembly.

RC	LOC	PART#	DESC
AB	C1024	822-10400	CAP, CERAMIC 0.1 UF 25V
C	C1024	822-10444	CAP, CERAMIC 0.001 UF 50V
ABC	C1025	822-10400	CAP, CERAMIC 0.1 UF 25V
ABC	C1026	822-10400	CAP, CERAMIC 0.1 UF 25V
ABC	C1027	822-10441	CAP, CERAMIC 0.0039UF 50V
ABC	C1028	822-10400	CAP, CERAMIC 0.1 UF 25V
ABC	C1029	822-10422	CAP, CERAMIC 0.01 UF 50V
ABC	C1030	822-10400	CAP, CERAMIC 0.1 UF 25V
ABC	C1031	822-10444	CAP, CERAMIC 0.001 UF 50V
ABC	C1032	822-11454	CAP, ALUMI ELECTRO 220 UF 6.3V
AB	C1033	822-10400	CAP, CERAMIC 0.1 UF 25V
C	C1033	822-10467	CAP, CERAMIC 68 PF 50V
ABC	C1034	822-10443	CAP, CERAMIC 0.1 UF 50V
ABC	C1035	822-11420	CAP, CERAMIC 200 PF 50V
AB	C1037	822-10505	CAP, CERAMIC 390 PF 50V
C	C1038	822-11497	CAP, CERAMIC 820 PF 50V
AB	C1038	822-11429	CAP, CERAMIC 820 PF 50V
AB	C1039	822-10400	CAP, CERAMIC 0.1 UF 25V
C	C1039	822-10467	CAP, CERAMIC 68 PF 50V
AB	C1040	822-11401	CAP, CERAMIC 18 PF 50V
C	C1040	822-11499	CAP, CERAMIC 18 PF 50V
ABC	C1041	822-10400	CAP, CERAMIC 0.1 UF 25V
AB	C1042	822-10400	CAP, CERAMIC 0.1 UF 25V
C	C1042	822-11486	CAP, CERAMIC 220 PF 50V
AB	C1043	822-10400	CAP, CERAMIC 0.1 UF 25V
C	C1044	822-11418	CAP, CERAMIC 100 PF 50V
AB	C1044	822-11486	CAP, CERAMIC 220 PF 50V
AB	C1045	822-11486	CAP, CERAMIC 220 PF 50V
AB	C1046	822-11400	CAP, CERAMIC 20 PF 50V
C	C1046	822-11498	CAP, CERAMIC 20 PF 50V
AB	C1047	822-11401	CAP, CERAMIC 18 PF 50V
C	C1047	822-11499	CAP, CERAMIC 18 PF 50V
AB	C1048	822-11401	CAP, CERAMIC 18 PF 50V
C	C1048	822-11499	CAP, CERAMIC 18 PF 50V
AB	C1049	822-11402	CAP, CERAMIC 22 PF 50V
C	C1049	822-11424	CAP, CERAMIC 22 PF 50V
AB	C1050	822-11400	CAP, CERAMIC 20 PF 50V
C	C1050	822-11498	CAP, CERAMIC 20 PF 50V
C	C1051	822-10400	CAP, CERAMIC 0.1 UF 25V
AB	C1051	822-11477	CAP, METAL PLASTIC 2.2 UF 50V
ABC	C1058	822-11452	CAP, ALUMI ELECTRO 100 UF 6.3V
ABC	C1060	822-10403	CAP, CERAMIC 150 PF 50V
ABC	C1061	822-10403	CAP, CERAMIC 150 PF 50V
ABC	C1062	822-10400	CAP, CERAMIC 0.1 UF 25V
ABC	C1063	822-10443	CAP, CERAMIC 0.1 UF 50V
B	C1064	822-11446	CAP, ALUMI ELECTRO 470 UF 16V
ABC	C1065	822-10443	CAP, CERAMIC 0.1 UF 50V
ABC	C1066	822-10400	CAP, CERAMIC 0.1 UF 25V
ABC	C1068	822-10400	CAP, CERAMIC 0.1 UF 25V
C	C1071	822-11417	CAP, CERAMIC 680 PF 50V
AB	C1071	822-11418	CAP, CERAMIC 100 PF 50V
AB	C1072	822-10388	CAP, CERAMIC 1 UF 16V
AB	C1074	822-10400	CAP, CERAMIC 0.1 UF 25V
C	C1076	822-11486	CAP, CERAMIC 220 PF 50V
C	C1102	822-11112	CAP, ALUMI ELECTRO 330 UF 10V
C	C1103	822-11105	CAP, ALUMI ELECTRO 1000 UF 10V

RC	LOC	PART#	DESC
AB	C301	822-10496	CAP, CERAMIC 0.0047UF 50V
C	C350	822-11457	CAP, ALUMI ELECTRO 100 UF 16 V
C	C351	822-11334	CAP, ALUMI ELECTRO 0.1 UF 50 V
AB	C351	822-11335	CAP, ALUMI ELECTRO 2.2 UF 50V
C	C352	822-11505	CAP, ALUMI ELECTRO 33 UF 25V
AB	C353	822-10400	CAP, CERAMIC 0.1 UF 25V
AB	C354	822-11438	CAP, ALUMI ELECTRO 2200 UF 10V
C	C354	822-11323	CAP, ALUMI ELECTRO 1000 UF 25V
AB	C355	822-11332	CAP, ALUMI ELECTRO 10 UF 16V
C	C355	822-11335	CAP, ALUMI ELECTRO 2.2 UF 50V
C	C356	822-11496	CAP, CERAMIC 0.0056UF 50V
AB	C356	822-11332	CAP, ALUMI ELECTRO 10 UF 16V
AB	C382	822-11457	CAP, ALUMI ELECTRO 100 UF 16V
A	C401	822-11442	CAP, ALUMI ELECTRO 10 UF 50V
C	C402	822-11487	CAP, CERAMIC 0.001 UF 50V
BC	C403	822-11442	CAP, ALUMI ELECTRO 10 UF 50V
C	C405	822-11506	CAP, ALUMI ELECTRO 2.2 UF 50V
AB	C405	822-10389	CAP, ALUMI ELECTRO 1 UF 50V
ABC	C406	822-11468	CAP, ALUMI ELECTRO 100 UF 35V
AB	C407	822-11087	CAP, ALUMI ELECTRO 1000 UF 25V
C	C407	822-11509	CAP, ALUMI ELECTRO 2200 UF 25V
AB	C408	822-11470	CAP, ALUMI ELECTRO 22 UF 50V
C	C411	822-11517	CAP, METAL PLASTIC 0.068 UF 100V
C	C412	822-11306	CAP, CERAMIC 22 PF 500V
B	C413	822-11353	CAP, METAL PLASTIC 0.1 UF 100V
C	C416	822-11306	CAP, CERAMIC 22 PF 500V
A	C416	822-11402	CAP, CERAMIC 22 PF 50V
B	C416	822-11424	CAP, CERAMIC 22 PF 50V
C	C417	822-11305	CAP, CERAMIC 470 PF 500V
AB	C417	822-11390	CAP, CERAMIC 560 PF 500V
AB	C418	822-11470	CAP, ALUMI ELECTRO 22 UF 50V
C	C418	822-11343	CAP, ALUMI ELECTRO 1 UF 160V
AB	C420	822-11389	CAP, CERAMIC 220 PF 500V
C	C421	822-11510	CAP, ALUMI ELECTRO 1000 UF 35V
ABC	C422	822-11473	CAP, ALUMI ELECTRO 1UF 250V
AB	C423	822-11121	CAP, METAL POLYPROP 0.47 UF 250V
C	C423	822-11146	CAP, METAL POLYPROP 0.56 UF 250V
B	C424	822-11149	CAP, METAL POLYPROP 0.0068UF 1.6KV
A	C424	822-11480	CAP, METAL POLYPROP 0.0091UF 1.6KV
A	C425	822-11384	CAP, CERAMIC 120 PF 2KVP
B	C425	822-11385	CAP, CERAMIC 0.0012UF 2KVP
C	C426	822-11140	CAP, CERAMIC 470 PF 2KVP
C	C428	822-11479	CAP, METAL POLYPROP 0.01 UF 1.6KV
AB	C430	822-11304	CAP, CERAMIC 0.001 UF 500V
C	C430	822-11489	CAP, CERAMIC 0.001 UF 1KV
AB	C431	822-11122	CAP, ALUMI ELECTRO 10 UF 250V
C	C431	822-11507	CAP, ALUMI ELECTRO 22 UF 250V
C	C432	822-11353	CAP, METAL PLASTIC 0.1 UF 100V
AB	C432	822-11482	CAP, METAL PLASTIC 0.47 UF 100V
A	C433	822-11466	CAP, ALUMI ELECTRO 330 UF 25V
B	C433	822-11471	CAP, ALUMI ELECTRO 47 UF 50V
C	C433	822-11472	CAP, ALUMI ELECTRO 22 UF 100V
C	C434	822-11516	CAP, METAL PLASTIC 0.15 UF 100V
AB	C438	822-11391	CAP, CERAMIC 680 PF 500V
C	C439	822-11493	CAP, CERAMIC 220 PF 50V
AB	C4001	822-11456	CAP, ALUMI ELECTRO 47 UF 6.3V

Critical safety components are identified by shading. Replace only with part numbers specified.

COMPONENT PARTS LIST

SEE REFERENCE CHART ON PAGE 1

NOTE: This list will enable you to easily determine the parts used on each Model, Chassis, or Assembly.

RC	LOC	PART#	DESC
ABC	C4002	822-10422	CAP, CERAMIC 0.01 UF 50V
ABC	C4003	822-10443	CAP, CERAMIC 0.1 UF 50V
ABC	C4004	822-11456	CAP, ALUMI ELECTRO 47 UF 6.3V
ABC	C4005	822-10422	CAP, CERAMIC 0.01 UF 50V
ABC	C4006	822-10470	CAP, CERAMIC 0.015 UF 50V
C	C4007	822-11322	CAP, ALUMI ELECTRO 1 UF 50 V
AB	C4007	822-10389	CAP, ALUMI ELECTRO 1 UF 50V
ABC	C4008	822-11452	CAP, ALUMI ELECTRO 100 UF 6.3V
ABC	C4009	822-10443	CAP, CERAMIC 0.1 UF 50V
ABC	C4010	822-11456	CAP, ALUMI ELECTRO 47 UF 6.3V
ABC	C4011	822-10389	CAP, ALUMI ELECTRO 1 UF 50V
C	C4014	822-10538	CAP, CERAMIC 0.047 UF 50V
AB	C4014	822-11475	CAP, POLY 0.047 UF 50V
ABC	C4015	822-11481	CAP, METAL PLASTIC 0.022 UF 100V
ABC	C4016	822-11460	CAP, ALUMI ELECTRO 4.7 UF 25V
ABC	C4017	822-10389	CAP, ALUMI ELECTRO 1 UF 50V
C	C4018	822-11495	CAP, CERAMIC 0.0012UF 50V
AB	C4018	822-11413	CAP, CERAMIC 0.0027UF 50V
ABC	C4020	822-10422	CAP, CERAMIC 0.01 UF 50V
ABC	C4021	822-11455	CAP, ALUMI ELECTRO 33 UF 6.3V
AB	C4022	822-11332	CAP, ALUMI ELECTRO 10 UF 16V
C	C4022	822-11461	CAP, ALUMI ELECTRO 4.7 UF 50V
ABC	C4023	822-11453	CAP, ALUMI ELECTRO 22 UF 6.3V
ABC	C4024	822-11460	CAP, ALUMI ELECTRO 4.7 UF 25V
AB	C4025	822-11410	CAP, CERAMIC 0.0015UF 50V
C	C4025	822-11412	CAP, CERAMIC 0.0022UF 50V
ABC	C4026	822-11452	CAP, ALUMI ELECTRO 100 UF 6.3V
AB	C4027	822-11410	CAP, CERAMIC 0.0015UF 50V
C	C4027	822-11429	CAP, CERAMIC 820 PF 50V
C	C4028	822-10400	CAP, CERAMIC 0.1 UF 25V
AB	C4028	822-11408	CAP, CERAMIC 0.22 UF 25V
AB	C4029	822-11416	CAP, CERAMIC 0.056 UF 50V
C	C4029	822-10482	CAP, CERAMIC 0.047 UF 50V
ABC	C4030	822-11332	CAP, ALUMI ELECTRO 10 UF 16V
ABC	C4031	822-11335	CAP, ALUMI ELECTRO 2.2 UF 50V
ABC	C4032	822-10503	CAP, CERAMIC 0.022 UF 50V
ABC	C4033	822-11335	CAP, ALUMI ELECTRO 2.2 UF 50V
ABC	C4034	822-10389	CAP, ALUMI ELECTRO 1 UF 50V
ABC	C4035	822-11452	CAP, ALUMI ELECTRO 100 UF 6.3V
ABC	C4036	822-10503	CAP, CERAMIC 0.022 UF 50V
ABC	C4037	822-10389	CAP, ALUMI ELECTRO 1 UF 50V
ABC	C4038	822-10443	CAP, CERAMIC 0.1 UF 50V
ABC	C4039	822-10389	CAP, ALUMI ELECTRO 1 UF 50V
ABC	C4041	822-10505	CAP, CERAMIC 390 PF 50V
ABC	C4043	822-10389	CAP, ALUMI ELECTRO 1 UF 50V
ABC	C4044	822-10443	CAP, CERAMIC 0.1 UF 50V
ABC	C4045	822-11456	CAP, ALUMI ELECTRO 47 UF 6.3V
ABC	C4046	822-10422	CAP, CERAMIC 0.01 UF 50V
ABC	C4047	822-11424	CAP, CERAMIC 22 PF 50V
AB	C4048	822-11406	CAP, CERAMIC 0.01 UF 25V
C	C4048	822-10422	CAP, CERAMIC 0.01 UF 50V
ABC	C4049	822-11423	CAP, CERAMIC 180 PF 50V
AB	C4050	822-11486	CAP, CERAMIC 220 PF 50V
C	C4050	822-10442	CAP, CERAMIC 0.01 UF 50V
ABC	C4051	822-10422	CAP, CERAMIC 0.01 UF 50V
AB	C4052	822-11406	CAP, CERAMIC 0.01 UF 25V
C	C4052	822-10442	CAP, CERAMIC 0.01 UF 50V
ABC	C4053	822-10422	CAP, CERAMIC 0.01 UF 50V
C	C4054	822-10422	CAP, CERAMIC 0.01 UF 50V
AB	C4054	822-10538	CAP, CERAMIC 0.047 UF 50V
AB	C4055	822-10443	CAP, CERAMIC 0.1 UF 50V
C	C4055	822-11501	CAP, CERAMIC 0.022 UF 50V
AB	C4057	822-11331	CAP, ALUMI ELECTRO 47 UF 16V
C	C4057	822-11333	CAP, ALUMI ELECTRO 47 UF 16V
ABC	C4058	822-11453	CAP, ALUMI ELECTRO 22 UF 6.3V
AB	C4059	822-11449	CAP, ALUMI ELECTRO 4.7 UF 25V
C	C4059	822-11460	CAP, ALUMI ELECTRO 4.7 UF 25V
AB	C4060	822-11451	CAP, ALUMI ELECTRO 4.7 UF 50V
C	C4060	822-10389	CAP, ALUMI ELECTRO 1 UF 50V
ABC	C4061	822-10389	CAP, ALUMI ELECTRO 1 UF 50V
ABC	C4062	822-10389	CAP, ALUMI ELECTRO 1 UF 50V
ABC	C4065	822-10388	CAP, CERAMIC 1 UF 16V
ABC	C4066	822-10388	CAP, CERAMIC 1 UF 16V
C	C4069	822-10422	CAP, CERAMIC 0.01 UF 50V
ABC	C4070	822-11456	CAP, ALUMI ELECTRO 47 UF 6.3V
ABC	C4071	822-10389	CAP, ALUMI ELECTRO 1 UF 50V
ABC	C4072	822-10400	CAP, CERAMIC 0.1 UF 25V
AB	C4073	822-11427	CAP, CERAMIC 47 PF 50V
C	C4073	822-10388	CAP, CERAMIC 1 UF 16V
ABC	C4074	822-11428	CAP, CERAMIC 470 PF 50V
AB	C4075	822-11308	CAP, CERAMIC 330 PF 50V
C	C4075	822-11332	CAP, ALUMI ELECTRO 10 UF 16V
AB	C4076	822-10400	CAP, CERAMIC 0.1 UF 25V
C	C4076	822-11452	CAP, ALUMI ELECTRO 100 UF 6.3V
C	C4077	822-11492	CAP, CERAMIC 0.1 UF 50V
AB	C4077	822-10400	CAP, CERAMIC 0.1 UF 25V
ABC	C4078	822-10400	CAP, CERAMIC 0.1 UF 25V
AB	C4079	822-10400	CAP, CERAMIC 0.1 UF 25V
AB	C4080	822-10400	CAP, CERAMIC 0.1 UF 25V
C	C4080	822-11407	CAP, CERAMIC 0.1 UF 25V
AB	C4082	822-10538	CAP, CERAMIC 0.047 UF 50V
C	C4083	822-11500	CAP, CERAMIC 27 PF 50V
AB	C4083	822-11425	CAP, CERAMIC 33 PF 50V
B	C4084	822-11421	CAP, CERAMIC 6 PF 50V
C	C4085	822-11403	CAP, CERAMIC 0.1 UF 16V
C	C4201	822-11398	CAP, CERAMIC 0.1 UF 50V
C	C4202	822-11500	CAP, CERAMIC 27 PF 50V
ABC	C4204	822-11428	CAP, CERAMIC 470 PF 50V
C	C4205	822-10443	CAP, CERAMIC 0.1 UF 50V
C	C4206	822-11332	CAP, ALUMI ELECTRO 10 UF 16V
C	C4207	822-11461	CAP, ALUMI ELECTRO 4.7 UF 50V
C	C4208	822-11403	CAP, CERAMIC 0.1 UF 16V
C	C4209	822-11428	CAP, CERAMIC 470 PF 50V
C	C4211	822-11111	CAP, ALUMI ELECTRO 470 UF 16V
C	C4214	822-11428	CAP, CERAMIC 470 PF 50V
C	C4220	822-11115	CAP, ALUMI ELECTRO 100 UF 16V
C	C502	822-11304	CAP, CERAMIC 0.001 UF 500V
AB	C502	822-11124	CAP, CERAMIC 0.0022UF 2KV
C	C503	822-11304	CAP, CERAMIC 0.001 UF 500V
AB	C503	822-11124	CAP, CERAMIC 0.0022UF 2KV
AB	C505	822-11305	CAP, CERAMIC 470 PF 500V
C	C505	822-11098	CAP, METAL POLY 0.22 UF 250V

Critical safety components are identified by shading. Replace only with part numbers specified.

COMPONENT PARTS LIST

SEE REFERENCE CHART ON PAGE 1

NOTE: This list will enable you to easily determine the parts used on each Model, Chassis, or Assembly.

RC	LOC	PART#	DESC
AB	C506	822-11145	CAP, METAL POLY 0.1 UF 250V
AB	C507	822-11125	CAP, ALUMI ELECTRO 470 UF 200V
C	C507	822-11508	CAP, ALUMI ELECTRO 680 UF 200V
AB	C508	822-11112	CAP, ALUMI ELECTRO 330 UF 10V
B	C509	822-11406	CAP, CERAMIC 0.01 UF 25V
A	C509	822-10400	CAP, CERAMIC 0.1 UF 25V
C	C509	822-11514	CAP, POLY 0.027 UF 50V
AB	C510	822-11468	CAP, ALUMI ELECTRO 100 UF 35V
C	C510	822-11511	CAP, ALUMI ELECTRO 100 UF 50V
AB	C511	822-11440	CAP, ALUMI ELECTRO 470 UF 25V
C	C512	822-11487	CAP, CERAMIC 0.001 UF 50V
AB	C512	822-10444	CAP, CERAMIC 0.001 UF 50V
AB	C513	822-11145	CAP, METAL POLY 0.1 UF 250V
AB	C514	822-11127	CAP, CERAMIC 0.0027UF 2KVP
AB	C515	822-10444	CAP, CERAMIC 0.001 UF 50V
C	C515	822-11513	CAP, POLY 0.0012UF 50V
ABC	C516	822-11305	CAP, CERAMIC 470 PF 500V
ABC	C517	822-11108	CAP, CERAMIC 820 PF 2KVP
ABC	C518	822-11305	CAP, CERAMIC 470 PF 500V
ABC	C519	822-11305	CAP, CERAMIC 470 PF 500V
AB	C520	822-11111	CAP, ALUMI ELECTRO 470 UF 16V
C	C520	822-11131	CAP, ALUMI ELECTRO 1000 UF 16V
ABC	C521	822-11128	CAP, ALUMI ELECTRO 220 UF 160V
C	C522	822-11127	CAP, CERAMIC 0.0027UF 2KVP
AB	C522	822-11450	CAP, ALUMI ELECTRO 1 UF 50V
ABC	C523	822-11469	CAP, ALUMI ELECTRO 470 UF 35V
A	C524	822-11131	CAP, ALUMI ELECTRO 1000 UF 16V
BC	C524	822-11465	CAP, ALUMI ELECTRO 1000 UF 25V
C	C527	822-11305	CAP, CERAMIC 470 PF 500V
AB	C527	822-10400	CAP, CERAMIC 0.1 UF 25V
ABC	C528	822-11392	CAP, CERAMIC 0.022 UF 50V
AB	C529	822-11130	CAP, CERAMIC 0.0022UF 125V
C	C529	822-11110	CAP, CERAMIC 0.001 UF 125V
AB	C530	822-11388	CAP, CERAMIC 0.0033UF 125V
C	C531	822-11131	CAP, ALUMI ELECTRO 1000 UF 16V
C	C537	822-11117	CAP, ALUMI ELECTRO 0.47 UF 50V
C	C549	822-11515	CAP, POLY 0.033 UF 50V
C	C554	822-11488	CAP, CERAMIC 0.0022UF 50V
AB	C554	822-11412	CAP, CERAMIC 0.0022UF 50V
AB	C560	822-11134	CAP, CERAMIC 0.0022UF 2KVP
ABC	C601	822-10389	CAP, ALUMI ELECTRO 1 UF 50V
C	C602	822-10443	CAP, CERAMIC 0.1 UF 50V
ABC	C604	822-11418	CAP, CERAMIC 100 PF 50V
ABC	C605	822-11418	CAP, CERAMIC 100 PF 50V
C	C607	822-11398	CAP, CERAMIC 0.1 UF 50V
AB	C607	822-10400	CAP, CERAMIC 0.1 UF 25V
C	C609	822-11406	CAP, CERAMIC 0.01 UF 25V
AB	C609	822-10400	CAP, CERAMIC 0.1 UF 25V
C	C610	822-10389	CAP, ALUMI ELECTRO 1 UF 50V
AB	C610	822-11335	CAP, ALUMI ELECTRO 2.2 UF 50V
C	C612	822-11503	CAP, ALUMI ELECTRO 220 UF 6.3V
AB	C612	822-11443	CAP, ALUMI ELECTRO 470 UF 10V
ABC	C613	822-10400	CAP, CERAMIC 0.1 UF 25V
C	C614	822-10422	CAP, CERAMIC 0.01 UF 50V
C	C615	822-11419	CAP, CERAMIC 0.001 UF 50V
ABC	C616	822-10422	CAP, CERAMIC 0.01 UF 50V

RC	LOC	PART#	DESC
AB	C617	822-10422	CAP, CERAMIC 0.01 UF 50V
ABC	C618	822-11418	CAP, CERAMIC 100 PF 50V
C	C620	822-11456	CAP, ALUMI ELECTRO 47 UF 6.3V
ABC	C621	822-10422	CAP, CERAMIC 0.01 UF 50V
AC	C622	822-11403	CAP, CERAMIC 0.1 UF 16V
B	C622	822-10400	CAP, CERAMIC 0.1 UF 25V
ABC	C623	822-10520	CAP, CERAMIC 0.0033UF 50V
ABC	C624	822-11333	CAP, ALUMI ELECTRO 47 UF 16V
ABC	C625	822-10388	CAP, CERAMIC 1 UF 16V
ABC	C626	822-10400	CAP, CERAMIC 0.1 UF 25V
ABC	C627	822-11405	CAP, CERAMIC 0.47 UF 16V
C	C630	822-10503	CAP, CERAMIC 0.022 UF 50V
AB	C630	822-11418	CAP, CERAMIC 100 PF 50V
C	C631	822-11494	CAP, CERAMIC 1 UF 50V
AB	C631	822-10388	CAP, CERAMIC 1 UF 16V
AB	C632	822-10389	CAP, ALUMI ELECTRO 1 UF 50V
C	C632	822-11335	CAP, ALUMI ELECTRO 2.2 UF 50V
ABC	C634	822-10422	CAP, CERAMIC 0.01 UF 50V
C	C635	822-11333	CAP, ALUMI ELECTRO 47 UF 16V
ABC	C636	822-10422	CAP, CERAMIC 0.01 UF 50V
AB	C637	822-11418	CAP, CERAMIC 100 PF 50V
ABC	C639	822-10422	CAP, CERAMIC 0.01 UF 50V
ABC	C640	822-10400	CAP, CERAMIC 0.1 UF 25V
C	C641	822-11504	CAP, ALUMI ELECTRO 220 UF 25V
AB	C641	822-11443	CAP, ALUMI ELECTRO 470 UF 10V
ABC	C642	822-11458	CAP, ALUMI ELECTRO 22 UF 16V
ABC	C643	822-11458	CAP, ALUMI ELECTRO 22 UF 16V
C	C644	822-11422	CAP, CERAMIC 120 PF 50V
AB	C644	822-11458	CAP, ALUMI ELECTRO 22 UF 16V
ABC	C645	822-10389	CAP, ALUMI ELECTRO 1 UF 50V
C	C646	822-11486	CAP, CERAMIC 220 PF 50V
AB	C646	822-11458	CAP, ALUMI ELECTRO 22 UF 16V
ABC	C647	822-10422	CAP, CERAMIC 0.01 UF 50V
AB	C648	822-11334	CAP, ALUMI ELECTRO 0.1 UF 50V
C	C648	822-11512	CAP, POLY 0.1 UF 50V
ABC	C649	822-10389	CAP, ALUMI ELECTRO 1 UF 50V
ABC	C650	822-10470	CAP, CERAMIC 0.015 UF 50V
A	C652	822-11331	CAP, ALUMI ELECTRO 47 UF 16V
B	C652	822-11448	CAP, ALUMI ELECTRO 47 UF 25 V
C	C652	822-11458	CAP, ALUMI ELECTRO 22 UF 16 V
ABC	C653	822-10422	CAP, CERAMIC 0.01 UF 50V
AB	C654	822-11401	CAP, CERAMIC 18 PF 50V
C	C654	822-11499	CAP, CERAMIC 18 PF 50V
ABC	C655	822-11333	CAP, ALUMI ELECTRO 47 UF 16V
C	C656	822-10422	CAP, CERAMIC 0.01 UF 50V
AB	C657	822-10422	CAP, CERAMIC 0.01 UF 50V
C	C657	822-10503	CAP, CERAMIC 0.022 UF 50V
ABC	C658	822-11408	CAP, CERAMIC 0.22 UF 25V
ABC	C659	822-11333	CAP, ALUMI ELECTRO 47 UF 16V
ABC	C660	822-10400	CAP, CERAMIC 0.1 UF 25V
ABC	C661	822-10422	CAP, CERAMIC 0.01 UF 50V
ABC	C662	822-11332	CAP, ALUMI ELECTRO 10 UF 16V
AB	C664	822-11478	CAP, METAL PLASTIC 1 UF 50V
C	C664	822-11355	CAP, METAL PLASTIC 1 UF 50V
C	C665	822-11502	CAP, ALUMI ELECTRO 4.7 UF 50 V
B	C665	822-11332	CAP, ALUMI ELECTRO 10 UF 16V

Critical safety components are identified by shading. Replace only with part numbers specified.

COMPONENT PARTS LIST

SEE REFERENCE CHART ON PAGE 1

NOTE: This list will enable you to easily determine the parts used on each Model, Chassis, or Assembly.

RC	LOC	PART#	DESC
A	C665	822-11457	CAP, ALUMI ELECTRO 100 UF 16V
AB	C666	822-10400	CAP, CERAMIC 0.1 UF 25V
C	C667	822-11409	CAP, CERAMIC 0.082 UF 25V
AB	C667	822-10422	CAP, CERAMIC 0.01 UF 50V
AB	C668	822-11419	CAP, CERAMIC 0.001 UF 50V
C	C668	822-11458	CAP, ALUMI ELECTRO 22 UF 16 V
AB	C669	822-10400	CAP, CERAMIC 0.1 UF 25V
C	C670	822-11458	CAP, ALUMI ELECTRO 22 UF 16 V
AB	C672	822-10422	CAP, CERAMIC 0.01 UF 50V
A	C673	822-11312	CAP, CERAMIC 220 PF 50V
B	C673	822-11411	CAP, CERAMIC 220 PF 50V
C	C673	822-11484	CAP, METAL PLASTIC 0.1 UF 50V
C	C674	822-11418	CAP, CERAMIC 100 PF 50V
B	C674	822-11422	CAP, CERAMIC 120 PF 50V
A	C674	822-11427	CAP, CERAMIC 47 PF 50V
C	C675	822-11403	CAP, CERAMIC 0.1 UF 16V
AB	C677	822-11486	CAP, CERAMIC 220 PF 50V
AB	C678	822-11441	CAP, ALUMI ELECTRO 220 UF 35V
AB	C679	822-11443	CAP, ALUMI ELECTRO 470 UF 10V
AB	C684	822-10503	CAP, CERAMIC 0.022 UF 50V
A	C687	822-11483	CAP, METAL PLASTIC 0.1 UF 50V
B	C687	822-11484	CAP, METAL PLASTIC 0.1 UF 50V
B	C688	822-11409	CAP, CERAMIC 0.082 UF 25V
A	C688	822-11416	CAP, CERAMIC 0.056 UF 50V
AB	C690	822-11426	CAP, CERAMIC 330 PF 50V
B	C691	822-10400	CAP, CERAMIC 0.1 UF 25V
A	C691	822-11485	CAP, METAL PLASTIC 0.12 UF 50V
A	C692	822-11399	CAP, CERAMIC 0.1 UF 50V
B	C692	822-10400	CAP, CERAMIC 0.1 UF 25V
B	C693	822-11411	CAP, CERAMIC 220 PF 50V
AB	C701	822-11397	CAP, CERAMIC 0.022 UF 25V
ABC	C751	822-11395	CAP, CERAMIC 100 PF 50V
ABC	C752	822-11398	CAP, CERAMIC 0.1 UF 50V
ABC	C755	822-11454	CAP, ALUMI ELECTRO 220 UF 6.3V
ABC	C779	822-11396	CAP, CERAMIC 0.001 UF 50V
ABC	C781	822-11396	CAP, CERAMIC 0.001 UF 50V
AB	C801	822-11124	CAP, CERAMIC 0.0022UF 2KV
AB	C805	822-11418	CAP, CERAMIC 100 PF 50V
C	C807	822-11395	CAP, CERAMIC 100 PF 50V
C	C808	822-11124	CAP, CERAMIC 0.0022UF 2KV
A	C809	822-11417	CAP, CERAMIC 680 PF 50V
B	C809	822-11429	CAP, CERAMIC 820 PF 50V
C	C810	822-11491	CAP, CERAMIC 680 PF 50V
A	C810	822-11414	CAP, CERAMIC 390 PF 50V
B	C810	822-11415	CAP, CERAMIC 560 PF 50V
C	C811	822-11490	CAP, CERAMIC 560 PF 50V
A	C811	822-11357	CAP, CERAMIC 470 PF 50V
B	C811	822-11415	CAP, CERAMIC 560 PF 50V
C	C812	822-11491	CAP, CERAMIC 680 PF 50V
AB	C819	822-11124	CAP, CERAMIC 0.0022UF 2KV
ABC	CD1001	811-10025	CORD, JUMPER 2L040904
ABC	CD1002	811-10026	CORD, JUMPER 2F051702
C	CD303	910-10016	CORD, CONNECTOR CH14399A
C	CD351	823-10106	CORD, CONNECTOR CH27080A
AB	CD351	823-10206	CORD, CONNECTOR CH27090A
AB	CD352	823-10204	CORD, CONNECTOR CH12435A

RC	LOC	PART#	DESC
ABC	CD4001	811-10027	CORD, JUMPER 2L061501
AB	CD501	811-10028	CORD, AC 0R614909
C	CD501	811-10038	CORD, AC 0R614908
C	CD602	910-10015	CORD, EIS CONNECTOR CH01408A
C	CD613	910-10018	CORD, CONNECTOR CH27088A
C	CD757	823-10111	CORD, CONNECTOR CH2A014A
AB	CD757	823-10207	CORD, CONNECTOR CH2A020A
AB	CD801	811-10029	CORD, CONNECTOR 8M82025A
C	CD801	910-10021	CORD, CONNECTOR CP01807A
C	CD802	811-10029	CORD, CONNECTOR 8M82025A
C	CD803	823-10143	CORD, JUMPER 2E054402
C	CD810	910-10019	CORD, CONNECTOR CH28067A
C	CD850	910-10017	CORD, CONNECTOR CH25092A
ABC	CF601	820-10601	FILTER, SAW SAF45MFY220ZR
ABC	CF603	905-10588	FILTER, CAP, ALUMI ELECTRORAMIC EFCT4R5YS5A
ABC	CF604	905-10589	FILTER, CAP, ALUMI ELECTRORAMIC EFCT4R5MW5
AB	CP1003	823-10194	CONNECTOR PCB SIDE 173979-4
ABC	CP1004	823-10128	CONNECTOR PCB SIDE TMC-J08P-B1
B	CP1005	823-10198	CONNECTOR PCB SIDE IMSA-9604S-05Z14
AC	CP1005	823-10129	CONNECTOR PCB SIDE 52045-0545
B	CP1006	823-10197	CONNECTOR PCB SIDE IMSA-9604S-04Z14
AC	CP1006	823-10130	CONNECTOR PCB SIDE 52045-0445
ABC	CP101	823-10136	CONNECTOR PCB SIDE 52044-0445
C	CP303	823-10211	CONNECTOR PCB SIDE TID-X04P-Z1BK
AB	CP351	823-10121	CONNECTOR PCB SIDE 8283_0612_00_000
AB	CP353	823-10195	CONNECTOR PCB SIDE 173979-7
ABC	CP4001	823-10131	CONNECTOR PCB SIDE TOC-C04X-B1
AB	CP4002	823-10199	CONNECTOR PCB SIDE IMSA-9604S-06Z14
C	CP4002	823-10133	CONNECTOR PCB SIDE 52045-0645
ABC	CP4003	823-10132	CONNECTOR PCB SIDE TMC-T02X-E1
AB	CP401	823-10188	CONNECTOR PCB SIDE B05B-DVS
C	CP401	823-10202	CONNECTOR PCB SIDE TS-80P-04-V1
C	CP4201	823-10122	CONNECTOR PCB SIDE 8283_1012_00_000
C	CP4202	823-10115	CONNECTOR PCB SIDE 8283_0712_00_000
ABC	CP501	910-10014	CORD, UX CONNECTOR THL-P03P-B1
ABC	CP502	823-10118	CONNECTOR PCB SIDE TV-50P-02-A1
C	CP505	823-10145	CONNECTOR PCB SIDE 005P-2100
C	CP506	823-10145	CONNECTOR PCB SIDE 005P-2100
C	CP601	910-10020	CORD, CONNECTOR CH2D069A
C	CP602	823-10115	CONNECTOR PCB SIDE 8283_0712_00_000
C	CP611	823-10210	CONNECTOR PCB SIDE IMSA-9110S-07
AB	CP757	823-10196	CONNECTOR PCB SIDE 1-173979-0
C	CP801	823-10145	CONNECTOR PCB SIDE 005P-2100
AB	CP801	823-10119	CONNECTOR PCB SIDE TS-80P-02-V1
C	CP802	823-10123	CONNECTOR PCB SIDE TS-80P-03-V1
C	CP803A	841-10091	WIRE HOLDER 51052-0500
C	CP803B	841-10091	WIRE HOLDER 51052-0500
C	CP805	823-10125	CONNECTOR PCB SIDE 8283_0512_00_000
C	CP810	823-10208	CONNECTOR PCB SIDE 8283_0812_00_000
C	CP820	823-10209	CONNECTOR PCB SIDE 8283_1312_00_000
AB	CP851A	841-10110	WIRE HOLDER 51048-1000
AB	CP851B	841-10110	WIRE HOLDER 51048-1000
ABC	D1001	903-10470	DIODE, SILICON 11E1-EIC
ABC	D1002	903-10390	DIODE, SILICON 1SS133T-77

Critical safety components are identified by shading. Replace only with part numbers specified.

COMPONENT PARTS LIST

SEE REFERENCE CHART ON PAGE 1

NOTE: This list will enable you to easily determine the parts used on each Model, Chassis, or Assembly.

RC	LOC	PART#	DESC
ABC	D1003	903-10398	LED SID1050CM
ABC	D1004	903-10399	DIODE, ZENER RD12FB-T7
ABC	D1005	903-10470	DIODE, SILICON 11E1-EIC
AB	D1007	903-10402	DIODE, ZENER MTZJ6.8B T-77
AB	D1008	903-10402	DIODE, ZENER MTZJ6.8B T-77
B	D1013	903-10401	DIODE, SCHOTTKY 11EQS04N-TA1B2
ABC	D1014	903-10207	DIODE, ZENER MTZJ5.1B T-77
ABC	D401	903-10470	DIODE, SILICON 11E1-EIC
C	D403	903-10391	DIODE, ZENER MTZJ30B T-77
C	D404	903-10391	DIODE, ZENER MTZJ30B T-77
ABC	D408	903-10385	DIODE, ZENER HZ27-1L TD
ABC	D409	903-10386	DIODE, ZENER HZ11B3L TD
ABC	D410	903-10402	DIODE, ZENER MTZJ6.8B T-77
C	D411	903-10503	DIODE, SILICON RMPG06J-G3
ABC	D412	903-10503	DIODE, SILICON RMPG06J
ABC	D413	903-10503	DIODE, SILICON RMPG06J
C	D415	903-10503	DIODE, SILICON RMPG06J-G3
C	D4004	903-10402	DIODE, ZENER MTZJ6.8B T-77
AB	D4005	903-10402	DIODE, ZENER MTZJ6.8B T-77
C	D4006	903-10390	DIODE, SILICON 1SS133T-77
AB	D4006	903-10402	DIODE, ZENER MTZJ6.8B T-77
C	D4201	903-10394	DIODE, ZENER MTZJ5.6B T-77
ABC	D4202	903-10400	DIODE, SCHOTTKY SB10-03A3
C	D4203	903-10402	DIODE, ZENER MTZJ6.8B T-77
C	D4204	903-10390	DIODE, SILICON 1SS133T-77
C	D4205	903-10194	DIODE, SILICON LFB-01L
C	D4206	903-10508	DIODE, ZENER MTZJ13B T-77
AB	D4207	903-10402	DIODE, ZENER MTZJ6.8B T-77
ABC	D501	903-10505	DIODE GBL06L-6177
AB	D502	903-10390	DIODE, SILICON 1SS133T-77
AB	D503	903-10400	DIODE, SCHOTTKY SB10-03A3
C	D503	903-10388	DIODE, SILICON RU2AM V1
ABC	D505	903-10392	DIODE, SCHOTTKY 21DQ09N-TA2B1
ABC	D506	903-10503	DIODE, SILICON RMPG06J
AB	D507	903-10501	DIODE, SILICON 15DF6
C	D507	903-10400	DIODE, SCHOTTKY SB10-03A3
C	D508	903-10392	DIODE, SCHOTTKY 21DQ09N-TA2B1
ABC	D509	903-10392	DIODE, SCHOTTKY 21DQ09N-TA2B1
AB	D510	903-10388	DIODE, SILICON RU2AM V1
C	D511	903-10407	DIODE, RECTIFER 10ELS2N-TA1B2
ABC	D512	903-10392	DIODE, SCHOTTKY 21DQ09N-TA2B1
C	D514	903-10392	DIODE, SCHOTTKY 21DQ09N-TA2B1
ABC	D515	903-10391	DIODE, ZENER MTZJ30B T-77
ABC	D516	903-10390	DIODE, SILICON 1SS133T-77
C	D517	903-10390	DIODE, SILICON 1SS133T-77
AB	D517	903-10407	DIODE, RECTIFIER 10ELS2N-TA1B2
ABC	D518	903-10390	DIODE, SILICON 1SS133T-77
ABC	D519	903-10392	DIODE, SCHOTTKY 21DQ09N-TA2B1
ABC	D521	903-10390	DIODE, SILICON 1SS133T-77
ABC	D523	903-10390	DIODE, SILICON 1SS133T-77
C	D524	903-10390	DIODE, SILICON 1SS133T-77
C	D525	903-10390	DIODE, SILICON 1SS133T-77
C	D526	903-10390	DIODE, SILICON 1SS133T-77
ABC	D528	903-10394	DIODE, ZENER MTZJ5.6B T-77
ABC	D529	903-10390	DIODE, SILICON 1SS133T-77
C	D530	903-10390	DIODE, SILICON 1SS133T-77

RC	LOC	PART#	DESC
ABC	D601	903-10390	DIODE, SILICON 1SS133T-77
AB	D602	903-10483	DIODE, ZENER MTZJ8.2B T-77
C	D602	903-10509	DIODE, ZENER MTZJ8.2C T-77
ABC	D604	903-10390	DIODE, SILICON 1SS133T-77
C	D605	903-10396	DIODE, SILICON 11ES1N-TA1B2
AB	D605	903-10504	DIODE, SILICON 11ES1-E1C
ABC	D606	903-10390	DIODE, SILICON 1SS133T-77
ABC	D607	903-10390	DIODE, SILICON 1SS133T-77
AB	D608	903-10400	DIODE, SCHOTTKY SB10-03A3
C	D608	903-10402	DIODE, ZENER MTZJ6.8B T-77
ABC	D609	903-10402	DIODE, ZENER MTZJ6.8B T-77
C	D610	903-10400	DIODE, SCHOTTKY SB10-03A3
AB	D610	903-10402	DIODE, ZENER MTZJ6.8B T-77
AB	D611	903-10402	DIODE, ZENER MTZJ6.8B T-77
AB	D612	903-10390	DIODE, SILICON 1SS133T-77
C	D612	903-10402	DIODE, ZENER MTZJ6.8B T-77
AB	D613	903-10390	DIODE, SILICON 1SS133T-77
C	D613	903-10402	DIODE, ZENER MTZJ6.8B T-77
AB	D614	903-10390	DIODE, SILICON 1SS133T-77
C	D614	903-10402	DIODE, ZENER MTZJ6.8B T-77
ABC	D615	903-10402	DIODE, ZENER MTZJ6.8B T-77
C	D616	903-10390	DIODE, SILICON 1SS133T-77
AB	D616	903-10402	DIODE, ZENER MTZJ6.8B T-77
C	D617	903-10390	DIODE, SILICON 1SS133T-77
AB	D617	903-10402	DIODE, ZENER MTZJ6.8B T-77
ABC	D618	903-10390	DIODE, SILICON 1SS133T-77
AB	D619	903-10390	DIODE, SILICON 1SS133T-77
AB	D620	903-10390	DIODE, SILICON 1SS133T-77
AB	D621	903-10390	DIODE, SILICON 1SS133T-77
ABC	D791	903-10397	LED SLZ-936C-11-S-T1
ABC	D792	903-10397	LED SLZ-936C-11-S-T1
ABC	D793	903-10397	LED SLZ-936C-11-S-T1
C	DY801	895-10120	DY 7M062505
ABC	EL001	NSP	EYE, LET XRY16X28BD
ABC	EL002	NSP	EYE, LET XRY20X30BD
AB	F501	936-10031	FUSE 233005-MB000
C	F501	936-10044	FUSE 23706.3
ABC	F502	936-10032	FUSE 23302.5-MB000
A	FB401	895-10121	TRANSFORMER, FLYBACK 3213013R
B	FB401	895-10122	TRANSFORMER, FLYBACK 3219010F
C	FB401	895-10123	TRANSFORMER, FLYBACK 3225010F
ABC	FH501	862-10003	HOLDERESISTOR, FUSE EYF-52BC
ABC	FH502	862-10003	HOLDERESISTOR, FUSE EYF-52BC
ABC	FH503	862-10003	HOLDERESISTOR, FUSE EYF-52BC
ABC	FH504	862-10003	HOLDERESISTOR, FUSE EYF-52BC
ABC	H5001	948-10035	HEAD (AUDIO CONTROL) HVMXA1072A
ABC	H5002	942-10060	HEAD (FULL ERASE) HVFHP0032A
ABC	IC1001	905-10650	IC, OEC7043A
ABC	IC1002	905-10458	IC, PST600H
AB	IC1003	905-10459	IC, BA6955AN
C	IC1003	905-10644	IC, BA6955N
A	IC1099	905-10638	IC, S-24C02BDP-11
B	IC1099	905-10639	IC, S-24C02BDP-11
C	IC1099	905-10651	IC, S-24C04BDP-LA
C	IC1101	905-10654	IC, BA05T
AB	IC351	905-10447	IC, AN7511

Critical safety components are identified by shading. Replace only with part numbers specified.

COMPONENT PARTS LIST

SEE REFERENCE CHART ON PAGE 1

NOTE: This list will enable you to easily determine the parts used on each Model, Chassis, or Assembly.

RC	LOC	PART#	DESC
C	IC352	905-10472	IC, AN7523
AB	IC401	905-10591	IC, LA78040
C	IC401	905-10653	IC, LA78041
ABC	IC4001	905-10641	IC, LA71067M-MPB
A	IC501	905-10646	IC, KIA7805PI
B	IC501	905-10647	IC, KIA7805API
AB	IC502	905-10648	IC, STR-G6623
C	IC502	905-10655	IC, STR-G6624
ABC	IC506	905-10636	PHOTO COUPLER TLP621(GR)
AB	IC601	905-10595	IC, M61203BFP
C	IC601	905-10592	IC, M61203CFP
AB	ICP501	936-10046	MICRO FUSE 251005RT
AB	ICP502	936-10046	MICRO FUSE 251005RT
A	ICP503	936-10034	MICRO FUSE 251005
B	ICP503	936-10046	MICRO FUSE 251005RT
AB	ICP505	936-10045	MICRO FUSE 251004RT
AB	J351	844-10060	JACK, RESISTOR, CARBONA 3.5 HSJ2630-010070
C	J4201	844-10090	JACK, RESISTOR, CARBONA AV2-20D-2
C	J4202	844-10090	JACK, RESISTOR, CARBONA AV2-20D-2
ABC	J701	844-10062	JACK, RESISTOR, CARBONA JPJ3811-01-430
BC	J801	878-10017	SOCKET, CRT CVT3275-5102
A	J801	878-10016	SOCKET, CRT HPS3200-010501
C	K001	994-10021	WEDGE 8115529
C	K002	994-10021	WEDGE 8115529
C	K003	994-10021	WEDGE 8115529
C	L001	NSP	CORE, FERRITE HF57T18.5*10*10
C	L002	NSP	CORE, TRIDAL KR16TT281807D
AB	L005	NSP	CORE, FERRITE HF57T18.5*10*10
ABC	L1001	820-10558	COIL, 2.2 UH
ABC	L401	820-10546	COIL, 4.7 MH
ABC	L4001	820-10613	COIL, 100 UH
ABC	L4002	820-10613	COIL, 100 UH
ABC	L4003	820-10557	COIL, 100 UH
ABC	L4004	820-10559	COIL, TRAP 2623003
ABC	L4005	820-10614	COIL, 47 UH
AB	L4007	820-10615	COIL, 100 UH
C	L4007	820-10627	COIL, 100 UH
ABC	L4008	820-10613	COIL, 100 UH
C	L4009	820-10557	COIL, 100 UH
AB	L4009	820-10613	COIL, 100 UH
ABC	L4010	820-10613	COIL, 100 UH
AB	L4011	820-10618	COIL, 22 UH
B	L4012	820-10619	COIL, 68 UH
C	L4205	820-10554	COIL, 100 UH
C	L501	820-10624	COIL, LINE FILTER SS24V-15045
A	L502	820-10623	COIL, LINE FILTER SS24V-10100
B	L502	820-10624	COIL, LINE FILTER SS24V-15045
A	L503	820-10621	COIL, DEGAUSS 8F140028
B	L503	820-10576	COIL, DEGAUSS 8R200026
C	L503	820-10629	COIL, DEGAUSS 8R250009
ABC	L601	820-10617	COIL, 1 UH
C	L602	820-10557	COIL, 100 UH
BC	L603	820-10554	COIL, 100 UH
A	L603	820-10611	COIL, 47 UH

RC	LOC	PART#	DESC
C	L605	820-10626	COIL, 1 UH
AB	L605	820-10617	COIL, 1 UH
AB	L607	820-10616	COIL, 12 UH
C	L607	820-10628	COIL, 15 UH
C	L608	820-10554	COIL, 100 UH
AB	L610	820-10612	COIL, 56 UH
C	L610	820-10560	COIL, 100 UH
ABC	L612	820-10620	COIL, 6.8 UH
C	L613	820-10558	COIL, 2.2 UH
AB	L801	820-10557	COIL, 100 UH
C	L801	820-10554	COIL, 100 UH
ABC	M101	941-10031	MOTOR (LOADING) MXN13FB11H
AB	M2001	861-10033	CAPSTAN DD UNIT F2QSB02
C	M2001	861-10039	CAPSTAN DD UNIT F2QSB06
ABC	M2003	941-10032	MICRO MOTOR EP14BD
C	MG801	949-10014	MAGNET, CONVERGENCAP, ALUMI ELECTRO 29MMSTAR
ABC	OS753	942-10058	REMOTE RECAP, ALUMI ELECTROIVER PIC-28143TH5
A	PCB010	809-10573	SYSCON PCB ASS'Y VMX180B
B	PCB010	809-10576	SYSCON PCB ASS'Y VMX180B
C	PCB010	809-10586	SYSCON PCB ASS'Y VMX192A
A	PCB030	809-10572	CONTROL PCB ASS'Y TEXA29A
B	PCB030	809-10574	CONTROL PCB ASS'Y TEXA29A
C	PCB030	809-10583	CONTROL PCB ASS'Y TE9962A
C	PCB070	809-10584	TV MT PCB ASS'Y TMX465A
A	PCB110	809-10571	CRT PCB ASS'Y TCX312A
B	PCB110	809-10575	CRT PCB ASS'Y TCX312B
C	PCB110	809-10585	CRT PCB ASS'Y TCX328A
ABC	PCB550	809-10570	DECK PCB ASS'Y VE8851
AB	Q1001	905-10637	PHOTO COUPLER SG-260
C	Q1001	921-10278	PHOTO COUPLER RPI-301
ABC	Q1002	921-10211	TRANSISTOR, SILICON 2SC2412KT146(R,S)
ABC	Q1003	921-10212	PHOTO COUPLER GP1S94L
ABC	Q1004	921-10206	TRANSISTOR, COMPOUND DTC124EKAT146
C	Q1005	921-10278	PHOTO COUPLER RPI-301
AB	Q1005	905-10637	PHOTO COUPLER SG-260
C	Q1006	921-10211	TRANSISTOR, SILICON 2SC2412KT146 R,S
AB	Q1007	921-10275	TRANSISTOR, COMPOUND DTC114EKT147
AB	Q1008	921-10208	TRANSISTOR, COMPOUND DTC114EKAT146
ABC	Q1009	921-10212	PHOTO COUPLER GP1S94L
ABC	Q101	921-10219	TRANSISTOR, PHOTO RPT-38PB113
ABC	Q1013	921-10265	PHOTO TRANSISTOR PNA2604M010R
AB	Q1023	921-10211	TRANSISTOR, SILICON 2SC2412KT146(R,S)
ABC	Q1024	921-10214	TRANSISTOR, COMPOUND DTC143EKAT146
C	Q1102	921-10104	TRANSISTOR, SILICON 2SD734(E,F)-AA
C	Q350	921-10211	TRANSISTOR, SILICON 2SC2412KT146 R,S
AB	Q401	921-10214	TRANSISTOR, COMPOUND DTC143EKAT146
AB	Q402	921-10207	TRANSISTOR, SILICON 2SB892(S,T)-AE
C	Q402	921-10192	TRANSISTOR, SILICON 2SC1815Y(TPE2)
AB	Q403	921-10274	TRANSISTOR, COMPOUND DTC114TKAT146
C	Q403	921-10199	TRANSISTOR, COMPOUND DTC114TSTP
C	Q404	921-10279	TRANSISTOR, SILICON 2SA1015Y(TPE2)
AB	Q404	921-10276	TRANSISTOR, COMPOUND DTA144EKAT146
C	Q405	921-10226	TRANSISTOR, SILICON 2SC2621(D,E)-RAC
AB	Q405	921-10193	TRANSISTOR, SILICON 2SC2271(D,E)-AE

Critical safety components are identified by shading. Replace only with part numbers specified.

COMPONENT PARTS LIST

SEE REFERENCE CHART ON PAGE 1

NOTE: This list will enable you to easily determine the parts used on each Model, Chassis, or Assembly.

RC	LOC	PART#	DESC
AB	Q406	921-10261	TRANSISTOR, SILICON 2SD2627LS-CBC11
C	Q406	921-10271	TRANSISTOR, SILICON 2SD2335(LS)
ABC	Q4001	921-10268	TRANSISTOR, SILICON 2SC3331(S,T,U)-A
ABC	Q4002	921-10268	TRANSISTOR, SILICON 2SC3331(S,T,U)-A
ABC	Q4003	921-10277	TRANSISTOR, COMPOUND DTA124ESTP
ABC	Q4005	921-10217	TRANSISTOR, SILICON 2SA1318(S,T)-AA
ABC	Q4006	921-10104	TRANSISTOR, SILICON 2SD734(E,F)-AA
ABC	Q4007	921-10204	TRANSISTOR, SILICON 2SA1037AKT146(R,S)
ABC	Q4008	921-10211	TRANSISTOR, SILICON 2SC2412KT146(R,S)
ABC	Q4009	921-10266	TRANSISTOR, SILICON 2SA1037KT147(R,S)
C	Q4010	921-10211	TRANSISTOR, SILICON 2SC2412KT146 R,S
AB	Q4011	921-10273	TRANSISTOR, COMPOUND DTC144EKAT146
C	Q4203	921-10211	TRANSISTOR, SILICON 2SC2412KT146 R,S
ABC	Q4204	921-10208	TRANSISTOR, COMPOUND DTC114EKAT146
C	Q4205	921-10208	TRANSISTOR, COMPOUND DTC114EKAT146
C	Q4206	921-10208	TRANSISTOR, COMPOUND DTC114EKAT146
C	Q4210	921-10204	TRANSISTOR, SILICON 2SA1037AKT146R,S
C	Q4212	921-10204	TRANSISTOR, SILICON 2SA1037AKT146R,S
AB	Q501	921-10269	TRANSISTOR, SILICON 2SD863(E,F)-AE
C	Q502	921-10196	TRANSISTOR, SILICON 2SA1371(D,E)-AE
ABC	Q504	921-10192	TRANSISTOR, SILICON 2SC1815Y(TPE2)
AB	Q506	921-10274	TRANSISTOR, COMPOUND DTC114TKAT146
AB	Q507	921-10192	TRANSISTOR, SILICON 2SC1815Y(TPE2)
C	Q507	921-10221	TRANSISTOR, SILICON 2SC945(C)-T(P,Q)
C	Q512	921-10195	TRANSISTOR, SILICON 2SC2909(S,T)-AA
AB	Q513	921-10208	TRANSISTOR, COMPOUND DTC114EKAT146
C	Q513	921-10201	TRANSISTOR, COMPOUND DTC114ESTP
C	Q601	921-10204	TRANSISTOR, SILICON 2SA1037AKT146R,S
AB	Q602	921-10202	TRANSISTOR, SILICON 2SC2120Y(TPE2)
C	Q602	921-10104	TRANSISTOR, SILICON 2SD734(E,F)-AA
AB	Q603	921-10202	TRANSISTOR, SILICON 2SC2120Y(TPE2)
C	Q603	921-10104	TRANSISTOR, SILICON 2SD734(E,F)-AA
AB	Q604	921-10270	TRANSISTOR, SILICON 2SD1207(S,T)-AE
AB	Q605	921-10270	TRANSISTOR, SILICON 2SD1207(S,T)-AE
AB	Q606	921-10269	TRANSISTOR, SILICON 2SD863(E,F)-AE
C	Q606	921-10202	TRANSISTOR, SILICON 2SC2120Y(TPE2)
ABC	Q608	921-10204	TRANSISTOR, SILICON 2SA1037AKT146(R,S)
AB	Q609	921-10208	TRANSISTOR, COMPOUND DTC114EKAT146
C	Q610	921-10104	TRANSISTOR, SILICON 2SD734(E,F)-AA
AB	Q611	921-10208	TRANSISTOR, COMPOUND DTC114EKAT146
C	Q611	921-10104	TRANSISTOR, SILICON 2SD734(E,F)-AA
ABC	Q612	921-10211	TRANSISTOR, SILICON 2SC2412KT146(R,S)
C	Q801	921-10267	TRANSISTOR, SILICON 2SC4075-YAC
C	Q802	921-10267	TRANSISTOR, SILICON 2SC4075-YAC
C	Q803	921-10267	TRANSISTOR, SILICON 2SC4075-YAC
AB	Q804	921-10223	TRANSISTOR, SILICON 2SC4217(D,E)-RAC
AB	Q805	921-10223	TRANSISTOR, SILICON 2SC4217(D,E)-RAC
AB	Q806	921-10223	TRANSISTOR, SILICON 2SC4217(D,E)-RAC
C	R1001	863-11562	RESISTOR, CARBON 3.3K OHM 1/4W
AB	R1001	863-11508	RESISTOR, CARBON 3.3K OHM 1/8W
C	R1002	863-11470	RESISTOR, CARBON 120 OHM 1/4W
AB	R1002	863-11496	RESISTOR, CARBON 120 OHM 1/8W
C	R1003	863-10464	RESISTOR, CARBON 82K OHM 1/10W
AB	R1003	863-11627	RESISTOR, CARBON 82K OHM 1/8W

RC	LOC	PART#	DESC
C	R1004	863-10451	RESISTOR, CARBON 1K OHM 1/10W
AB	R1004	863-11491	RESISTOR, CARBON 1K OHM 1/8W
ABC	R1005	863-11326	RESISTOR, FUSE 2.7 OHM 1W
C	R1006	863-11606	RESISTOR, CARBON 47K OHM 1/10W
AB	R1006	863-11513	RESISTOR, CARBON 47K OHM 1/8W
C	R1007	863-10481	RESISTOR, CARBON 10 OHM 1/10W
AB	R1007	863-11613	RESISTOR, CARBON 10 OHM 1/8W
BC	R1008	863-10451	RESISTOR, CARBON 1K OHM 1/10W
A	R1008	863-11491	RESISTOR, CARBON 1K OHM 1/8W
C	R1009	863-11476	RESISTOR, CARBON 560 OHM 1/4W
AB	R1009	863-11514	RESISTOR, CARBON 560 OHM 1/8W
C	R1010	863-11562	RESISTOR, CARBON 3.3K OHM 1/4W
AB	R1010	863-11508	RESISTOR, CARBON 3.3K OHM 1/8W
C	R1011	863-10404	RESISTOR, CARBON 2.2K OHM 1/10W
AB	R1011	863-11502	RESISTOR, CARBON 2.2K OHM 1/8W
C	R1012	863-10402	RESISTOR, CARBON 10K OHM 1/10W
AB	R1012	863-11492	RESISTOR, CARBON 10K OHM 1/8W
C	R1013	863-11476	RESISTOR, CARBON 560 OHM 1/4W
AB	R1013	863-11514	RESISTOR, CARBON 560 OHM 1/8W
ABC	R1016	863-11559	RESISTOR, CARBON 270 OHM 1/4W
C	R1017	863-10478	RESISTOR, CARBON 33K OHM 1/10W
AB	R1017	863-11509	RESISTOR, CARBON 33K OHM 1/8W
C	R1018	863-10534	RESISTOR, CARBON 4.7K OHM 1/10W
AB	R1018	863-11512	RESISTOR, CARBON 4.7K OHM 1/8W
C	R1019	863-11606	RESISTOR, CARBON 47K OHM 1/10W
AB	R1019	863-11513	RESISTOR, CARBON 47K OHM 1/8W
C	R1020	863-10543	RESISTOR, CARBON 22K OHM 1/10W
AB	R1020	863-11503	RESISTOR, CARBON 22K OHM 1/8W
C	R1021	863-10481	RESISTOR, CARBON 10 OHM 1/10W
AB	R1021	863-11613	RESISTOR, CARBON 10 OHM 1/8W
C	R1024	863-10537	RESISTOR, CARBON 1K OHM 1/4W
AB	R1024	863-11491	RESISTOR, CARBON 1K OHM 1/8W
C	R1025	863-10534	RESISTOR, CARBON 4.7K OHM 1/10W
C	R1028	863-11651	RESISTOR, CARBON 4.7K OHM 1/4W
AB	R1028	863-11512	RESISTOR, CARBON 4.7K OHM 1/8W
C	R1029	863-10534	RESISTOR, CARBON 4.7K OHM 1/10W
AB	R1029	863-11512	RESISTOR, CARBON 4.7K OHM 1/8W
C	R1030	863-10451	RESISTOR, CARBON 1K OHM 1/10W
C	R1031	863-10451	RESISTOR, CARBON 1K OHM 1/10W
AB	R1031	863-11491	RESISTOR, CARBON 1K OHM 1/8W
C	R1032	863-10402	RESISTOR, CARBON 10K OHM 1/10W
AB	R1032	863-11492	RESISTOR, CARBON 10K OHM 1/8W
C	R1033	863-10451	RESISTOR, CARBON 1K OHM 1/10W
AB	R1033	863-11491	RESISTOR, CARBON 1K OHM 1/8W
C	R1034	863-10410	RESISTOR, CARBON 1M OHM 1/10W
AB	R1034	863-11494	RESISTOR, CARBON 1M OHM 1/8W
C	R1035	863-10481	RESISTOR, CARBON 10 OHM 1/10W
AB	R1035	863-11613	RESISTOR, CARBON 10 OHM 1/8W
C	R1036	863-10534	RESISTOR, CARBON 4.7K OHM 1/10W
AB	R1036	863-11512	RESISTOR, CARBON 4.7K OHM 1/8W
AB	R1038	863-11501	RESISTOR, CARBON 220 OHM 1/8W
C	R1039	863-11557	RESISTOR, CARBON 18K OHM 1/4W
AB	R1039	863-11617	RESISTOR, CARBON 18K OHM 1/8W
C	R1040	863-11650	RESISTOR, CARBON 33K OHM 1/4W
AB	R1040	863-11509	RESISTOR, CARBON 33K OHM 1/8W
AB	R1042	863-11501	RESISTOR, CARBON 220 OHM 1/8W

Critical safety components are identified by shading. Replace only with part numbers specified.

COMPONENT PARTS LIST

SEE REFERENCE CHART ON PAGE 1

NOTE: This list will enable you to easily determine the parts used on each Model, Chassis, or Assembly.

RC	LOC	PART#	DESC
C	R1043	863-11472	RESISTOR, CARBON 22K OHM 1/4W
C	R1044	863-10483	RESISTOR, CARBON 3.3K OHM 1/10W
AB	R1044	863-11508	RESISTOR, CARBON 3.3K OHM 1/8W
C	R1045	863-10483	RESISTOR, CARBON 3.3K OHM 1/10W
AB	R1045	863-11508	RESISTOR, CARBON 3.3K OHM 1/8W
C	R1046	863-11651	RESISTOR, CARBON 4.7K OHM 1/4W
AB	R1046	863-11512	RESISTOR, CARBON 4.7K OHM 1/8W
C	R1047	863-11651	RESISTOR, CARBON 4.7K OHM 1/4W
AB	R1047	863-11512	RESISTOR, CARBON 4.7K OHM 1/8W
C	R1049	863-10534	RESISTOR, CARBON 4.7K OHM 1/10W
AB	R1049	863-11512	RESISTOR, CARBON 4.7K OHM 1/8W
C	R1050	863-10495	RESISTOR, CARBON 100 OHM 1/10W
AB	R1050	863-11490	RESISTOR, CARBON 100 OHM 1/8W
C	R1051	863-10392	RESISTOR, CARBON 5.6K OHM 1/10W
AB	R1051	863-11515	RESISTOR, CARBON 5.6K OHM 1/8W
C	R1053	863-10522	RESISTOR, CARBON 220 OHM 1/10W
AB	R1053	863-11501	RESISTOR, CARBON 220 OHM 1/8W
C	R1054	863-10543	RESISTOR, CARBON 22K OHM 1/10W
AB	R1064	863-11491	RESISTOR, CARBON 1K OHM 1/8W
C	R1066	863-10451	RESISTOR, CARBON 1K OHM 1/10W
AB	R1066	863-11491	RESISTOR, CARBON 1K OHM 1/8W
AB	R1075	863-11512	RESISTOR, CARBON 4.7K OHM 1/8W
C	R1077	863-10451	RESISTOR, CARBON 1K OHM 1/10W
AB	R1077	863-11491	RESISTOR, CARBON 1K OHM 1/8W
ABC	R1079	863-11558	RESISTOR, CARBON 22 OHM 1/4W
C	R1083	863-10486	RESISTOR, CARBON 56K OHM 1/10W
AB	R1083	863-11622	RESISTOR, CARBON 56K OHM 1/8W
C	R1087	863-10486	RESISTOR, CARBON 56K OHM 1/10W
AB	R1087	863-11622	RESISTOR, CARBON 56K OHM 1/8W
C	R1102	863-11468	RESISTOR, CARBON 100 OHM 1/4W
AB	R350	863-11558	RESISTOR, CARBON 22 OHM 1/4W
AB	R351	863-11558	RESISTOR, CARBON 22 OHM 1/4W
AB	R352	863-11512	RESISTOR, CARBON 4.7K OHM 1/8W
C	R353	863-10559	RESISTOR, CARBON 68K OHM 1/10W
AB	R353	863-11517	RESISTOR, CARBON 68K OHM 1/8W
C	R356	863-11553	RESISTOR, CARBON 10K OHM 1/4W
AB	R357	863-11515	RESISTOR, CARBON 5.6K OHM 1/8W
C	R359	863-11606	RESISTOR, CARBON 47K OHM 1/10W
AB	R359	863-11513	RESISTOR, CARBON 47K OHM 1/8W
AB	R401	863-11511	RESISTOR, CARBON 470 OHM 1/8W
AB	R402	863-11513	RESISTOR, CARBON 47K OHM 1/8W
A	R408	863-11568	RESISTOR, CARBON 2.2K OHM 1/2W
B	R410	863-11574	RESISTOR, CARBON 2.7K OHM 1/2W
A	R410	863-11575	RESISTOR, CARBON 3.3K OHM 1/2W
C	R411	863-11485	RESISTOR, METAL 11K OHM 1/6W
AB	R411	863-11590	RESISTOR, METAL 33K OHM 1/6W
C	R412	863-11538	RESISTOR, CARBON 1K OHM 1/6W
C	R413	863-11352	RESISTOR, METAL 22K OHM 1/6W
A	R413	863-11499	RESISTOR, CARBON 1.8K OHM 1/8W
B	R413	863-11508	RESISTOR, CARBON 3.3K OHM 1/8W
C	R414	863-11656	RESISTOR, METAL 3.3K OHM 1/6W
AB	R414	863-11617	RESISTOR, CARBON 18K OHM 1/8W
ABC	R415	863-11585	RESISTOR, METAL 2.2 OHM 1/2W
C	R416	863-11487	RESISTOR, METAL 6.8K OHM 1/6W
AB	R416	863-11627	RESISTOR, CARBON 82K OHM 1/8W
C	R417	863-11645	RESISTOR, CARBON 470 OHM 1/2W
B	R417	863-11569	RESISTOR, CARBON 330 OHM 1/2W
C	R418	863-11643	RESISTOR, CARBON 2.2 OHM 1/2W
C	R419	863-11645	RESISTOR, CARBON 470 OHM 1/2W
A	R419	863-11569	RESISTOR, CARBON 330 OHM 1/2W
B	R419	863-11571	RESISTOR, CARBON 560 OHM 1/2W
AB	R420	863-11612	RESISTOR, CARBON 8.2K OHM 1/10W
C	R421	863-11641	RESISTOR, CARBON 2.2K OHM 1/2W
A	R421	863-11551	RESISTOR, CARBON 560 OHM 1/2W
B	R421	863-11552	RESISTOR, CARBON 820 OHM 1/2W
AB	R422	863-11580	RESISTOR, METAL 4.7 OHM 2W
C	R422	863-11633	RESISTOR, CARBON 10K OHM 1/6W
ABC	R423	863-11534	RESISTOR, CARBON 10K OHM 1/4W
C	R424	863-11633	RESISTOR, CARBON 10K OHM 1/6W
A	R424	863-11573	RESISTOR, CARBON 2.2K OHM 1/2W
C	R439	863-11329	RESISTOR, METAL 22K OHM 1/4W
AB	R439	863-11600	RESISTOR, CARBON 22K OHM 1/10W
C	R440	863-11330	RESISTOR, METAL 8.2K OHM 1/4W
A	R440	863-11607	RESISTOR, CARBON 51K OHM 1/10W
B	R440	863-11608	RESISTOR, CARBON 51K OHM 1/10W
C	R441	863-11331	RESISTOR, METAL 100K OHM 1/4W
A	R441	863-11609	RESISTOR, CARBON 56K OHM 1/10W
B	R441	863-10486	RESISTOR, CARBON 56K OHM 1/10W
C	R442	863-11586	RESISTOR, METAL 12K OHM 1/4W
AB	R442	863-11599	RESISTOR, CARBON 15K OHM 1/10W
C	R443	863-11358	RESISTOR, METAL 2.2K OHM 1/4W
A	R443	863-11605	RESISTOR, CARBON 4.7K OHM 1/10W
B	R443	863-10463	RESISTOR, CARBON 6.8K OHM 1/10W
C	R444	863-11586	RESISTOR, METAL 12K OHM 1/4W
B	R444	863-11600	RESISTOR, CARBON 22K OHM 1/10W
A	R444	863-11602	RESISTOR, CARBON 33K OHM 1/10W
ABC	R447	863-11311	RESISTOR, FUSE 68 OHM 1/2W
C	R449	863-11592	R, CAP, ALUMI ELECTROMENT 4.7K OHM 7W
A	R449	863-11597	RESISTOR, FUSE 100 OHM 1/4W
B	R449	863-11598	RESISTOR, FUSE 68 OHM 1/4W
C	R450	863-11594	RESISTOR, FUSE 1.8 OHM 2W
B	R450	863-11595	RESISTOR, FUSE 2.7 OHM 2W
A	R450	863-11596	RESISTOR, FUSE 4.7 OHM 2W
C	R452	863-11658	RESISTOR, FUSE 1 OHM 1W
C	R453	863-11631	RESISTOR, CARBON 150K OHM 1/4W
AB	R453	863-11555	RESISTOR, CARBON 120K OHM 1/4W
B	R454	863-11536	RESISTOR, CARBON 47K OHM 1/4W
A	R454	863-11537	RESISTOR, CARBON 68K OHM 1/4W
C	R456	863-11466	RESISTOR, CARBON 4.7K OHM 1/2W
AB	R456	863-11570	RESISTOR, CARBON 4.7K OHM 1/2W
C	R460	863-11630	RESISTOR, CARBON 100 OHM 1/4W
AB	R460	863-11566	RESISTOR, CARBON 100 OHM 1/4W
C	R462	863-11641	RESISTOR, CARBON 2.2K OHM 1/2W
C	R467	863-11459	RESISTOR, CARBON 1 OHM 1/2W
C	R490	863-11632	RESISTOR, CARBON 220K OHM 1/4W
AB	R490	863-11537	RESISTOR, CARBON 68K OHM 1/4W
C	R4001	863-10423	RESISTOR, CARBON 560 OHM 1/10W
AB	R4001	863-11626	RESISTOR, CARBON 820 OHM 1/8W
C	R4002	863-10402	RESISTOR, CARBON 10K OHM 1/10W
AB	R4002	863-11492	RESISTOR, CARBON 10K OHM 1/8W
C	R4003	863-10402	RESISTOR, CARBON 10K OHM 1/10W
AB	R4003	863-11492	RESISTOR, CARBON 10K OHM 1/8W

Critical safety components are identified by shading. Replace only with part numbers specified.

SEE REFERENCE CHART ON PAGE 1

NOTE: This list will enable you to easily determine the parts used on each Model, Chassis, or Assembly.

RC	LOC	PART#	DESC
C	R4004	863-11601	RESISTOR, CARBON 2.7K OHM 1/10W
C	R4005	863-10410	RESISTOR, CARBON 1M OHM 1/10W
AB	R4005	863-11498	RESISTOR, CARBON 1.5K OHM 1/8W
B	R4006	863-11561	RESISTOR, CARBON 33 OHM 1/4W
A	R4006	863-11563	RESISTOR, CARBON 39 OHM 1/4W
C	R4006	863-11654	RESISTOR, CARBON 68 OHM 1/4W
C	R4007	863-10525	RESISTOR, CARBON 330 OHM 1/10W
AB	R4007	863-11516	RESISTOR, CARBON 680 OHM 1/8W
C	R4008	863-10402	RESISTOR, CARBON 10K OHM 1/10W
AB	R4008	863-11614	RESISTOR, CARBON 12K OHM 1/8W
B	R4009	863-11601	RESISTOR, CARBON 2.7K OHM 1/10W
C	R4009	863-10534	RESISTOR, CARBON 4.7K OHM 1/10W
A	R4009	863-11505	RESISTOR, CARBON 2.7K OHM 1/8W
C	R4010	863-10483	RESISTOR, CARBON 3.3K OHM 1/10W
AB	R4010	863-11508	RESISTOR, CARBON 3.3K OHM 1/8W
C	R4011	863-10543	RESISTOR, CARBON 22K OHM 1/10W
AB	R4011	863-11503	RESISTOR, CARBON 22K OHM 1/8W
C	R4012	863-11662	RESISTOR, CARBON 18K OHM 1/10W
AB	R4012	863-11503	RESISTOR, CARBON 22K OHM 1/8W
C	R4013	863-10402	RESISTOR, CARBON 10K OHM 1/10W
AB	R4013	863-11492	RESISTOR, CARBON 10K OHM 1/8W
C	R4014	863-10462	RESISTOR, CARBON 1.8K OHM 1/10W
AB	R4014	863-11499	RESISTOR, CARBON 1.8K OHM 1/8W
AB	R4015	863-11560	RESISTOR, CARBON 2.2 OHM 1/4W
C	R4015	863-10459	RESISTOR, CARBON 2.2 OHM 1/10W
AB	R4016	863-11490	RESISTOR, CARBON 100 OHM 1/8W
C	R4019	863-10534	RESISTOR, CARBON 4.7K OHM 1/10W
AB	R4019	863-11512	RESISTOR, CARBON 4.7K OHM 1/8W
C	R4020	863-10402	RESISTOR, CARBON 10K OHM 1/10W
AB	R4020	863-11492	RESISTOR, CARBON 10K OHM 1/8W
C	R4022	863-10463	RESISTOR, CARBON 6.8K OHM 1/10W
AB	R4022	863-11623	RESISTOR, CARBON 6.8K OHM 1/8W
C	R4023	863-10409	RESISTOR, CARBON 15K OHM 1/10W
AB	R4023	863-11623	RESISTOR, CARBON 6.8K OHM 1/8W
C	R4024	863-10402	RESISTOR, CARBON 10K OHM 1/10W
AB	R4024	863-11492	RESISTOR, CARBON 10K OHM 1/8W
C	R4025	863-11667	RESISTOR, CARBON 330K OHM 1/10W
AB	R4025	863-11620	RESISTOR, CARBON 330K OHM 1/8W
C	R4026	863-11606	RESISTOR, CARBON 47K OHM 1/10W
AB	R4026	863-11509	RESISTOR, CARBON 33K OHM 1/8W
C	R4027	863-11664	RESISTOR, CARBON 270 OHM 1/10W
AB	R4027	863-11496	RESISTOR, CARBON 120 OHM 1/8W
C	R4028	863-10485	RESISTOR, CARBON 1.5K OHM 1/10W
AB	R4028	863-11623	RESISTOR, CARBON 6.8K OHM 1/8W
ABC	R4029	863-10413	RESISTOR, CARBON 2.2M OHM 1/10W
C	R4031	863-11554	RESISTOR, CARBON 12K OHM 1/4W
AB	R4031	863-11619	RESISTOR, CARBON 27K OHM 1/8W
C	R4032	863-11665	RESISTOR, CARBON 27K OHM 1/10W
AB	R4032	863-11619	RESISTOR, CARBON 27K OHM 1/8W
C	R4033	863-10451	RESISTOR, CARBON 1K OHM 1/10W
AB	R4033	863-11491	RESISTOR, CARBON 1K OHM 1/8W
C	R4034	863-11670	RESISTOR, CARBON 820 OHM 1/10W
AB	R4034	863-11626	RESISTOR, CARBON 820 OHM 1/8W
C	R4036	863-11606	RESISTOR, CARBON 47K OHM 1/10W
AB	R4036	863-11513	RESISTOR, CARBON 47K OHM 1/8W
C	R4039	863-10543	RESISTOR, CARBON 22K OHM 1/10W

RC	LOC	PART#	DESC
AB	R4039	863-11509	RESISTOR, CARBON 33K OHM 1/8W
C	R4041	863-10463	RESISTOR, CARBON 6.8K OHM 1/10W
BC	R4044	863-10401	RESISTOR, CARBON 8.2K OHM 1/10W
A	R4044	863-11518	RESISTOR, CARBON 8.2K OHM 1/8W
AB	R4045	863-11624	RESISTOR, CARBON 680K OHM 1/8W
ABC	R4046	863-11610	RESISTOR, CARBON 680 OHM 1/10W
C	R4047	863-10402	RESISTOR, CARBON 10K OHM 1/10W
AB	R4047	863-11492	RESISTOR, CARBON 10K OHM 1/8W
C	R4048	863-10534	RESISTOR, CARBON 4.7K OHM 1/10W
AB	R4048	863-11512	RESISTOR, CARBON 4.7K OHM 1/8W
C	R4049	863-10558	RESISTOR, CARBON 1.2K OHM 1/10W
AB	R4049	863-11491	RESISTOR, CARBON 1K OHM 1/8W
C	R4050	863-10536	RESISTOR, CARBON 680K OHM 1/10W
AB	R4050	863-11624	RESISTOR, CARBON 680K OHM 1/8W
C	R4051	863-11665	RESISTOR, CARBON 27K OHM 1/10W
AB	R4051	863-11619	RESISTOR, CARBON 27K OHM 1/8W
AB	R4052	863-11561	RESISTOR, CARBON 33 OHM 1/4W
C	R4052	863-11653	RESISTOR, CARBON 56 OHM 1/4W
C	R4053	863-10485	RESISTOR, CARBON 1.5K OHM 1/10W
AB	R4053	863-11623	RESISTOR, CARBON 6.8K OHM 1/8W
C	R4054	863-11601	RESISTOR, CARBON 2.7K OHM 1/10W
C	R4055	863-10401	RESISTOR, CARBON 8.2K OHM 1/10W
AB	R4055	863-11518	RESISTOR, CARBON 8.2K OHM 1/8W
B	R4056	863-10410	RESISTOR, CARBON 1M OHM 1/10W
A	R4056	863-11494	RESISTOR, CARBON 1M OHM 1/8W
C	R4057	863-10404	RESISTOR, CARBON 2.2K OHM 1/10W
AB	R4057	863-11502	RESISTOR, CARBON 2.2K OHM 1/8W
C	R4059	863-11668	RESISTOR, CARBON 3.9K OHM 1/10W
C	R4060	863-10458	RESISTOR, CARBON 220K OHM 1/10W
AB	R4060	863-11618	RESISTOR, CARBON 220K OHM 1/8W
AB	R4061	863-11516	RESISTOR, CARBON 680 OHM 1/8W
C	R4062	863-10458	RESISTOR, CARBON 220K OHM 1/10W
AB	R4062	863-11618	RESISTOR, CARBON 220K OHM 1/8W
ABC	R4063	863-11603	RESISTOR, CARBON 3.3M OHM 1/10W
AB	R4064	863-11624	RESISTOR, CARBON 680K OHM 1/8W
C	R4065	863-10404	RESISTOR, CARBON 2.2K OHM 1/10W
AB	R4065	863-11502	RESISTOR, CARBON 2.2K OHM 1/8W
C	R4066	863-10534	RESISTOR, CARBON 4.7K OHM 1/10W
C	R4067	863-11606	RESISTOR, CARBON 47K OHM 1/10W
AB	R4067	863-11513	RESISTOR, CARBON 47K OHM 1/8W
C	R4068	863-11606	RESISTOR, CARBON 47K OHM 1/10W
AB	R4068	863-11513	RESISTOR, CARBON 47K OHM 1/8W
AB	R4070	863-11532	RESISTOR, CARBON 10M OHM 1/4W
C	R4070	863-11652	RESISTOR, CARBON 47K OHM 1/4W
C	R4072	863-10402	RESISTOR, CARBON 10K OHM 1/10W
A	R4072	863-10543	RESISTOR, CARBON 22K OHM 1/10W
B	R4072	863-11503	RESISTOR, CARBON 22K OHM 1/8W
C	R4076	863-10410	RESISTOR, CARBON 1M OHM 1/10W
C	R4077	863-10536	RESISTOR, CARBON 680K OHM 1/10W
C	R4078	863-10495	RESISTOR, CARBON 100 OHM 1/10W
AB	R4078	863-11490	RESISTOR, CARBON 100 OHM 1/8W
C	R4080	863-11468	RESISTOR, CARBON 100 OHM 1/4W
C	R4201	863-11611	RESISTOR, CARBON 75 OHM 1/10W
AB	R4201	863-11625	RESISTOR, CARBON 75 OHM 1/8W
C	R4203	863-10567	RESISTOR, CARBON 2.2K OHM 1/4W
C	R4204	863-10451	RESISTOR, CARBON 1K OHM 1/10W

Critical safety components are identified by shading. Replace only with part numbers specified.

COMPONENT PARTS LIST

SEE REFERENCE CHART ON PAGE 1

NOTE: This list will enable you to easily determine the parts used on each Model, Chassis, or Assembly.

RC	LOC	PART#	DESC
C	R4205	863-10451	RESISTOR, CARBON 1K OHM 1/10W
C	R4206	863-10495	RESISTOR, CARBON 100 OHM 1/10W
C	R4207	863-11611	RESISTOR, CARBON 75 OHM 1/10W
C	R4213	863-11611	RESISTOR, CARBON 75 OHM 1/10W
C	R4232	863-10402	RESISTOR, CARBON 10K OHM 1/10W
C	R4238	863-11666	RESISTOR, CARBON 33 OHM 1/10W
C	R4239	863-11640	RESISTOR, CARBON 220 OHM 1/2W
AB	R500	863-11351	RESISTOR, CARBON 2.7M OHM 1/2W
C	R500	863-11336	RESISTOR, SOLID 2.7M OHM 1/2W
AB	R501	863-11317	R, CAP, ALUMI ELECTROMENT 2.2 OHM 7W
C	R501	863-11657	R, CAP, ALUMI ELECTROMENT 2.2 OHM 7W
C	R502	863-11646	RESISTOR, CARBON 4.7 OHM 1/2W
AB	R502	863-11567	RESISTOR, CARBON 22 OHM 1/2W
ABC	R503	863-11562	RESISTOR, CARBON 3.3K OHM 1/4W
AB	R504	863-11547	RESISTOR, CARBON 120K OHM 1/2W
C	R504	863-11642	RESISTOR, CARBON 270K OHM 1/2W
B	R505	863-10495	RESISTOR, CARBON 100 OHM 1/10W
A	R505	863-11490	RESISTOR, CARBON 100 OHM 1/8W
C	R506	863-11637	RESISTOR, CARBON 2.2K OHM 1/6W
AB	R506	863-11502	RESISTOR, CARBON 2.2K OHM 1/8W
C	R507	863-11538	RESISTOR, CARBON 1K OHM 1/6W
C	R508	863-11634	RESISTOR, CARBON 1M OHM 1/6W
C	R509	863-11633	RESISTOR, CARBON 10K OHM 1/6W
AB	R510	863-11547	RESISTOR, CARBON 120K OHM 1/2W
C	R511	863-11633	RESISTOR, CARBON 10K OHM 1/6W
A	R512	863-11579	RESISTOR, METAL 27K OHM 1W
BC	R512	863-11339	RESISTOR, METAL OXIDE 27K OHM 1W
C	R513	863-11470	RESISTOR, CARBON 120 OHM 1/4W
AB	R513	863-11564	RESISTOR, CARBON 390 OHM 1/4W
C	R514	863-11636	RESISTOR, CARBON 150 OHM 1/6W
C	R515	863-11633	RESISTOR, CARBON 10K OHM 1/6W
AB	R515	863-11553	RESISTOR, CARBON 10K OHM 1/4W
C	R516	863-11647	RESISTOR, CARBON 150 OHM 1/4W
C	R517	863-11660	RESISTOR, FUSE 1 OHM 2W
C	R523	863-11633	RESISTOR, CARBON 10K OHM 1/6W
B	R523	863-10402	RESISTOR, CARBON 10K OHM 1/10W
A	R523	863-11492	RESISTOR, CARBON 10K OHM 1/8W
C	R528	863-11319	RESISTOR, METAL OXIDE 47K OHM 3W
ABC	R529	863-11588	RESISTOR, METAL 2.7K OHM 1/4W
C	R532	863-11635	RESISTOR, CARBON 12K OHM 1/6W
AB	R532	863-11554	RESISTOR, CARBON 12K OHM 1/4W
C	R533	863-11542	RESISTOR, CARBON 2.7K OHM 1/6W
AB	R533	863-11557	RESISTOR, CARBON 18K OHM 1/4W
C	R541	863-11324	RESISTOR, CARBON 5.6K OHM 1/6W
C	R542	863-11320	RESISTOR, METAL 0.15OHM 1W
AB	R542	863-11576	RESISTOR, METAL 0.18OHM 1W
C	R543	863-11659	RESISTOR, FUSE 680 OHM 1/4W
AB	R543	863-11321	RESISTOR, FUSE 680 OHM 1/4W
C	R552	863-11633	RESISTOR, CARBON 10K OHM 1/6W
ABC	R553	863-11550	RESISTOR, CARBON 39K OHM 1/2W
ABC	R554	863-11549	RESISTOR, CARBON 22K OHM 1/2W
C	R601	863-10567	RESISTOR, CARBON 2.2K OHM 1/4W
AB	R601	863-11502	RESISTOR, CARBON 2.2K OHM 1/8W
C	R602	863-10522	RESISTOR, CARBON 220 OHM 1/10W
AB	R602	863-11501	RESISTOR, CARBON 220 OHM 1/8W
C	R603	863-10522	RESISTOR, CARBON 220 OHM 1/10W
AB	R603	863-11501	RESISTOR, CARBON 220 OHM 1/8W
C	R604	863-11611	RESISTOR, CARBON 75 OHM 1/10W
C	R605	863-10458	RESISTOR, CARBON 220K OHM 1/10W
AB	R605	863-11619	RESISTOR, CARBON 27K OHM 1/8W
AB	R607	863-11460	RESISTOR, CARBON 1K OHM 1/2W
C	R607	863-11640	RESISTOR, CARBON 220 OHM 1/2W
C	R608	863-10402	RESISTOR, CARBON 10K OHM 1/10W
AB	R608	863-11492	RESISTOR, CARBON 10K OHM 1/8W
BC	R609	863-11610	RESISTOR, CARBON 680 OHM 1/10W
A	R609	863-11516	RESISTOR, CARBON 680 OHM 1/8W
C	R610	863-11468	RESISTOR, CARBON 100 OHM 1/4W
B	R610	863-10410	RESISTOR, CARBON 1M OHM 1/10W
A	R610	863-11494	RESISTOR, CARBON 1M OHM 1/8W
BC	R611	863-10402	RESISTOR, CARBON 10K OHM 1/10W
A	R611	863-11492	RESISTOR, CARBON 10K OHM 1/8W
C	R612	863-10392	RESISTOR, CARBON 5.6K OHM 1/10W
AC	R614	863-10487	RESISTOR, CARBON 100K OHM 1/10W
B	R614	863-11493	RESISTOR, CARBON 100K OHM 1/8W
AB	R615	863-11511	RESISTOR, CARBON 470 OHM 1/8W
C	R616	863-10522	RESISTOR, CARBON 220 OHM 1/10W
C	R620	863-10495	RESISTOR, CARBON 100 OHM 1/10W
C	R621	863-10485	RESISTOR, CARBON 1.5K OHM 1/10W
B	R621	863-10404	RESISTOR, CARBON 2.2K OHM 1/10W
A	R621	863-11502	RESISTOR, CARBON 2.2K OHM 1/8W
C	R622	863-11664	RESISTOR, CARBON 270 OHM 1/10W
AB	R622	863-11616	RESISTOR, CARBON 180 OHM 1/8W
C	R624	863-11663	RESISTOR, CARBON 2K OHM 1/10W
AB	R624	863-11500	RESISTOR, CARBON 2K OHM 1/8W
C	R625	863-10402	RESISTOR, CARBON 10K OHM 1/10W
AB	R625	863-11492	RESISTOR, CARBON 10K OHM 1/8W
C	R626	863-10402	RESISTOR, CARBON 10K OHM 1/10W
AB	R626	863-11492	RESISTOR, CARBON 10K OHM 1/8W
C	R628	863-11644	RESISTOR, CARBON 47 OHM 1/2W
B	R628	863-10495	RESISTOR, CARBON 100 OHM 1/10W
A	R628	863-11490	RESISTOR, CARBON 100 OHM 1/8W
B	R629	863-10495	RESISTOR, CARBON 100 OHM 1/10W
C	R629	863-10423	RESISTOR, CARBON 560 OHM 1/10W
A	R629	863-11490	RESISTOR, CARBON 100 OHM 1/8W
C	R630	863-10495	RESISTOR, CARBON 100 OHM 1/10W
AB	R630	863-11490	RESISTOR, CARBON 100 OHM 1/8W
C	R631	863-11669	RESISTOR, CARBON 6.2K OHM 1/10W
B	R631	863-10463	RESISTOR, CARBON 6.8K OHM 1/10W
A	R631	863-11623	RESISTOR, CARBON 6.8K OHM 1/8W
AB	R632	863-11581	RESISTOR, METAL OXIDE 220 OHM 2W
C	R632	863-10404	RESISTOR, CARBON 2.2K OHM 1/10W
C	R633	863-10401	RESISTOR, CARBON 8.2K OHM 1/10W
AB	R633	863-11518	RESISTOR, CARBON 8.2K OHM 1/8W
C	R634	863-10495	RESISTOR, CARBON 100 OHM 1/10W
AB	R634	863-11490	RESISTOR, CARBON 100 OHM 1/8W
C	R635	863-10495	RESISTOR, CARBON 100 OHM 1/10W
AB	R635	863-11490	RESISTOR, CARBON 100 OHM 1/8W
C	R636	863-10495	RESISTOR, CARBON 100 OHM 1/10W
AB	R636	863-11490	RESISTOR, CARBON 100 OHM 1/8W
C	R638	863-11478	RESISTOR, CARBON 6.8K OHM 1/4W
B	R638	863-11615	RESISTOR, CARBON 15K OHM 1/8W
A	R638	863-11518	RESISTOR, CARBON 8.2K OHM 1/8W

Critical safety components are identified by shading. Replace only with part numbers specified.

COMPONENT PARTS LIST

SEE REFERENCE CHART ON PAGE 1

NOTE: This list will enable you to easily determine the parts used on each Model, Chassis, or Assembly.

RC	LOC	PART#	DESC
C	R639	863-11648	RESISTOR, CARBON 1.5K OHM 1/4W
B	R639	863-11498	RESISTOR, CARBON 1.5K OHM 1/8W
A	R639	863-11518	RESISTOR, CARBON 8.2K OHM 1/8W
C	R640	863-10525	RESISTOR, CARBON 330 OHM 1/10W
B	R640	863-11616	RESISTOR, CARBON 180 OHM 1/8W
A	R640	863-11507	RESISTOR, CARBON 330 OHM 1/8W
C	R641	863-11662	RESISTOR, CARBON 18K OHM 1/10W
AB	R641	863-11617	RESISTOR, CARBON 18K OHM 1/8W
B	R642	863-10402	RESISTOR, CARBON 10K OHM 1/10W
C	R642	863-10487	RESISTOR, CARBON 100K OHM 1/10W
A	R642	863-11508	RESISTOR, CARBON 3.3K OHM 1/8W
BC	R643	863-11606	RESISTOR, CARBON 47K OHM 1/10W
A	R643	863-11513	RESISTOR, CARBON 47K OHM 1/8W
C	R644	863-11468	RESISTOR, CARBON 100 OHM 1/4W
AB	R644	863-11490	RESISTOR, CARBON 100 OHM 1/8W
C	R646	863-11661	RESISTOR, CARBON 12K OHM 1/10W
B	R646	863-10543	RESISTOR, CARBON 22K OHM 1/10W
A	R646	863-11492	RESISTOR, CARBON 10K OHM 1/8W
BC	R647	863-10404	RESISTOR, CARBON 2.2K OHM 1/10W
A	R647	863-11502	RESISTOR, CARBON 2.2K OHM 1/8W
BC	R648	863-10404	RESISTOR, CARBON 2.2K OHM 1/10W
A	R648	863-11502	RESISTOR, CARBON 2.2K OHM 1/8W
B	R649	863-10404	RESISTOR, CARBON 2.2K OHM 1/10W
C	R649	863-11601	RESISTOR, CARBON 2.7K OHM 1/10W
A	R649	863-11502	RESISTOR, CARBON 2.2K OHM 1/8W
ABC	R650	863-11565	RESISTOR, CARBON 470 OHM 1/4W
B	R651	863-10495	RESISTOR, CARBON 100 OHM 1/10W
C	R651	863-10451	RESISTOR, CARBON 1K OHM 1/10W
A	R651	863-11501	RESISTOR, CARBON 220 OHM 1/8W
B	R652	863-10534	RESISTOR, CARBON 4.7K OHM 1/10W
A	R652	863-11512	RESISTOR, CARBON 4.7K OHM 1/8W
B	R654	863-10495	RESISTOR, CARBON 100 OHM 1/10W
A	R654	863-11490	RESISTOR, CARBON 100 OHM 1/8W
BC	R655	863-10495	RESISTOR, CARBON 100 OHM 1/10W
A	R655	863-11490	RESISTOR, CARBON 100 OHM 1/8W
C	R656	863-10404	RESISTOR, CARBON 2.2K OHM 1/10W
AB	R656	863-11491	RESISTOR, CARBON 1K OHM 1/8W
BC	R657	863-10451	RESISTOR, CARBON 1K OHM 1/10W
A	R657	863-11491	RESISTOR, CARBON 1K OHM 1/8W
BC	R658	863-10404	RESISTOR, CARBON 2.2K OHM 1/10W
A	R658	863-11502	RESISTOR, CARBON 2.2K OHM 1/8W
BC	R659	863-10404	RESISTOR, CARBON 2.2K OHM 1/10W
A	R659	863-11502	RESISTOR, CARBON 2.2K OHM 1/8W
BC	R660	863-10404	RESISTOR, CARBON 2.2K OHM 1/10W
A	R660	863-11502	RESISTOR, CARBON 2.2K OHM 1/8W
C	R662	863-11468	RESISTOR, CARBON 100 OHM 1/4W
AB	R662	863-11490	RESISTOR, CARBON 100 OHM 1/8W
C	R663	863-10495	RESISTOR, CARBON 100 OHM 1/10W
AB	R663	863-11490	RESISTOR, CARBON 100 OHM 1/8W
C	R665	863-11649	RESISTOR, CARBON 2.2M OHM 1/4W
C	R666	863-10495	RESISTOR, CARBON 100 OHM 1/10W
AB	R667	863-11498	RESISTOR, CARBON 1.5K OHM 1/8W
C	R670	863-10451	RESISTOR, CARBON 1K OHM 1/10W
C	R671	863-10485	RESISTOR, CARBON 1.5K OHM 1/10W
C	R672	863-10460	RESISTOR, CARBON 470 OHM 1/10W
C	R673	863-10534	RESISTOR, CARBON 4.7K OHM 1/10W

RC	LOC	PART#	DESC
C	R674	863-10462	RESISTOR, CARBON 1.8K OHM 1/10W
B	R676	863-10451	RESISTOR, CARBON 1K OHM 1/10W
A	R676	863-11491	RESISTOR, CARBON 1K OHM 1/8W
AB	R677	863-11492	RESISTOR, CARBON 10K OHM 1/8W
AB	R678	863-11572	RESISTOR, CARBON 4.7K OHM 1/4W
B	R683	863-10495	RESISTOR, CARBON 100 OHM 1/10W
A	R683	863-11490	RESISTOR, CARBON 100 OHM 1/8W
B	R684	863-11611	RESISTOR, CARBON 75 OHM 1/10W
A	R684	863-11625	RESISTOR, CARBON 75 OHM 1/8W
B	R685	863-11540	RESISTOR, CARBON 1.8K OHM 1/6W
A	R685	863-11556	RESISTOR, CARBON 1.8K OHM 1/4W
B	R686	863-11544	RESISTOR, CARBON 1K OHM 1/2W
A	R686	863-11545	RESISTOR, CARBON 1.5K OHM 1/2W
B	R687	863-10536	RESISTOR, CARBON 680K OHM 1/10W
B	R688	863-10462	RESISTOR, CARBON 1.8K OHM 1/10W
ABC	R754	863-11541	RESISTOR, CARBON 270 OHM 1/6W
ABC	R761	863-11541	RESISTOR, CARBON 270 OHM 1/6W
AB	R766	863-11533	RESISTOR, CARBON 10 OHM 1/4W
C	R766	863-11639	RESISTOR, CARBON 100 OHM 1/2W
ABC	R771	863-11538	RESISTOR, CARBON 1K OHM 1/6W
ABC	R772	863-11539	RESISTOR, CARBON 1.5K OHM 1/6W
ABC	R773	863-11542	RESISTOR, CARBON 2.7K OHM 1/6W
ABC	R774	863-11324	RESISTOR, CARBON 5.6K OHM 1/6W
ABC	R775	863-11543	RESISTOR, CARBON 820 OHM 1/6W
ABC	R776	863-11538	RESISTOR, CARBON 1K OHM 1/6W
ABC	R777	863-11539	RESISTOR, CARBON 1.5K OHM 1/6W
ABC	R778	863-11543	RESISTOR, CARBON 820 OHM 1/6W
ABC	R793	863-11541	RESISTOR, CARBON 270 OHM 1/6W
AB	R801	863-11535	RESISTOR, CARBON 1M OHM 1/4W
A	R802	863-11577	RESISTOR, METAL 12K OHM 2W
B	R802	863-11578	RESISTOR, METAL 15K OHM 2W
C	R804	863-11341	RESISTOR, METAL OXIDE 12K OHM 2W
A	R805	863-11577	RESISTOR, METAL 12K OHM 2W
B	R805	863-11578	RESISTOR, METAL 15K OHM 2W
C	R806	863-11341	RESISTOR, METAL OXIDE 12K OHM 2W
AB	R807	863-11350	RESISTOR, CARBON 2.7K OHM 1/4W
AB	R808	863-11350	RESISTOR, CARBON 2.7K OHM 1/4W
C	R808	863-11341	RESISTOR, METAL OXIDE 12K OHM 2W
C	R810	863-11541	RESISTOR, CARBON 270 OHM 1/6W
A	R810	863-11577	RESISTOR, METAL 12K OHM 2W
B	R810	863-11578	RESISTOR, METAL 15K OHM 2W
C	R811	863-11541	RESISTOR, CARBON 270 OHM 1/6W
AB	R811	863-11512	RESISTOR, CARBON 4.7K OHM 1/8W
C	R812	863-11541	RESISTOR, CARBON 270 OHM 1/6W
AB	R812	863-10534	RESISTOR, CARBON 4.7K OHM 1/10W
AB	R813	863-11512	RESISTOR, CARBON 4.7K OHM 1/8W
AB	R814	863-11604	RESISTOR, CARBON 390 OHM 1/10W
AB	R815	863-11621	RESISTOR, CARBON 390 OHM 1/8W
AB	R816	863-11604	RESISTOR, CARBON 390 OHM 1/10W
C	R817	863-11638	RESISTOR, CARBON 4.7K OHM 1/6W
C	R819	863-11638	RESISTOR, CARBON 4.7K OHM 1/6W
AB	R820	863-11350	RESISTOR, CARBON 2.7K OHM 1/4W
C	R821	863-11638	RESISTOR, CARBON 4.7K OHM 1/6W
C	R828	863-11350	RESISTOR, CARBON 2.7K OHM 1/4W
C	R829	863-11350	RESISTOR, CARBON 2.7K OHM 1/4W
C	R830	863-11350	RESISTOR, CARBON 2.7K OHM 1/4W

Critical safety components are identified by shading. Replace only with part numbers specified.

COMPONENT PARTS LIST

SEE REFERENCE CHART ON PAGE 1

NOTE: This list will enable you to easily determine the parts used on each Model, Chassis, or Assembly.

RC	LOC	PART#	DESC
ABC	RY501	995-10014	RELAY SDT-S-112LMR
C	SP301	849-10038	SPEAKER P-300S-1
C	SP302	849-10038	SPEAKER P-300S-1
A	SP351	849-10031	SPEAKER 810-47-171
B	SP351	849-10039	SPEAKER P-300S-2
ABC	SW1001	885-10081	SWITCH (LEAF) SPVF130100
ABC	SW751	885-10045	SWITCH, TACT SKHVBED010
ABC	SW791	885-10045	SWITCH, TACT SKHVBED010
ABC	SW792	885-10045	SWITCH, TACT SKHVBED010
ABC	SW793	885-10045	SWITCH, TACT SKHVBED010
ABC	SW794	885-10045	SWITCH, TACT SKHVBED010
ABC	SW795	885-10045	SWITCH, TACT SKHVBED010
ABC	SW796	885-10045	SWITCH, TACT SKHVBED010
ABC	SW797	885-10045	SWITCH, TACT SKHVBED010
ABC	SW798	885-10045	SWITCH, TACT SKHVBED010
ABC	SW799	885-10045	SWITCH, TACT SKHVBED010
A	T401	895-10114	TRANS, HORIZONTAL DRIVE 305Y001
B	T401	895-10088	TRANS, HORIZONTAL DRIVE 305Y002
C	T401	895-10124	TRANS, HORIZONTAL DRIVE 5013001
ABC	T4001	820-10561	COIL, BIAS OSC 1626007
A	T501	895-10125	TRANSFORMER, SWITCHING 81290154
B	T501	895-10126	TRANSFORMER, SWITCHING 8129015S
C	T501	895-10128	TRANSFORMER, SWITCHING 81350534
ABC	TH501	820-10602	DEGAUSS, ELEMENT PTH451A3R0Q11
B	TM101	924-10063	TRANSMITTER HG-23A04
AC	TM101	924-10062	TRANSMITTER HG-23A06
ABC	TU601	975-10040	TUNER, UHF-VHF TECC1040PG31A
ABC	UN4001	835-10042	CYLINDER UNIT ASSY A545A0A500
A	V801	900-10050	CRT W/DY A34AGT13X98(L)
B	V801	900-10054	CRT W/YOKE ASSY
C	V801	900-10049	COLOR PICTURE TUBE A63AHC26X
AB	VR502	863-11628	VOLUME, SEMI FIXED EVNCYAA03BY2
C	VR502	863-11342	VOLUME, SEMI FIXED RH063MCN2R
ABC	X1001	903-10408	CRYSTAL HC-49/U-S 12MHz
ABC	X1002	903-10500	CRYSTAL DT-26 32.768KHz
ABC	X4001	903-10499	CRYSTAL HC-49/U 3.579545MHz
ABC	X602	903-10410	CRYSTAL HC-49/C 3.579545MHz

RC	LOC	PART#	DESC

Critical safety components are identified by shading. Replace only with part numbers specified.

TVBR 13/1942Z MECHANICAL EXPLODED VIEW

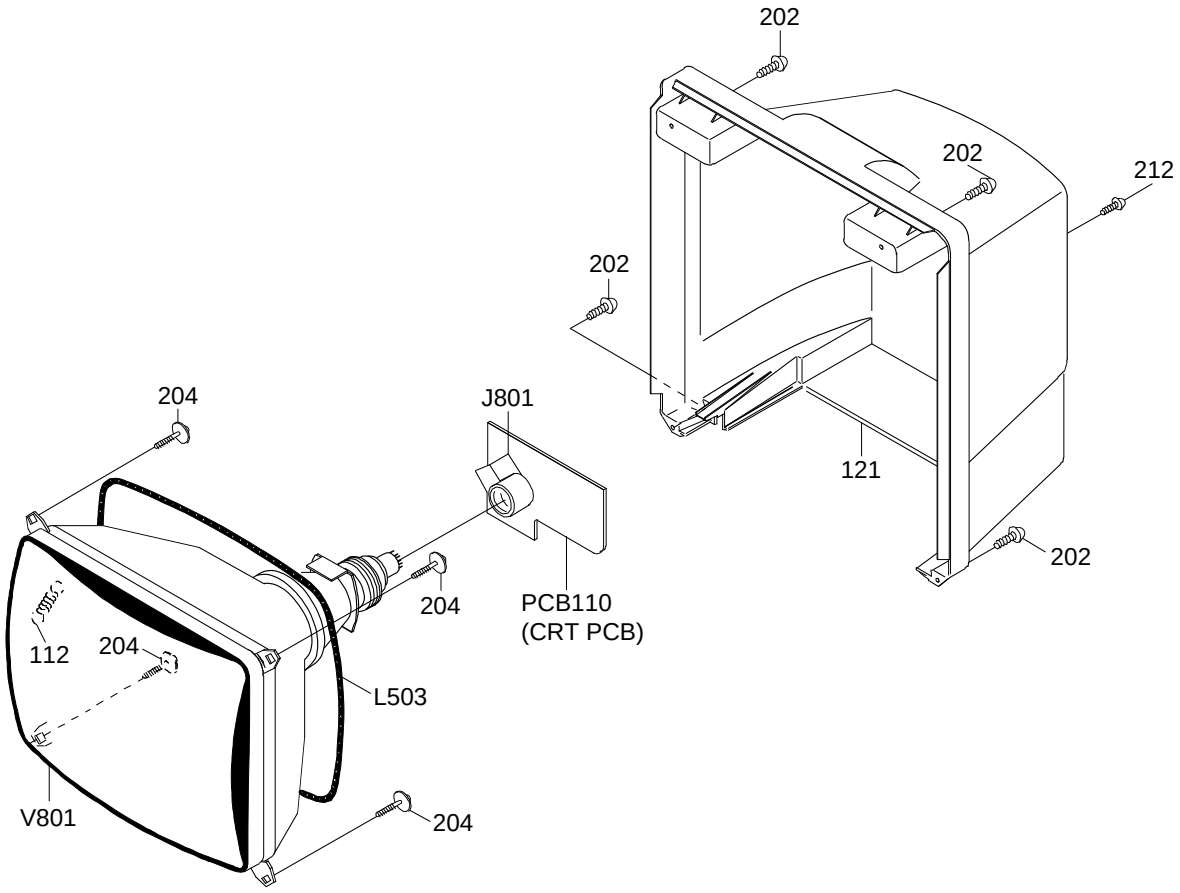

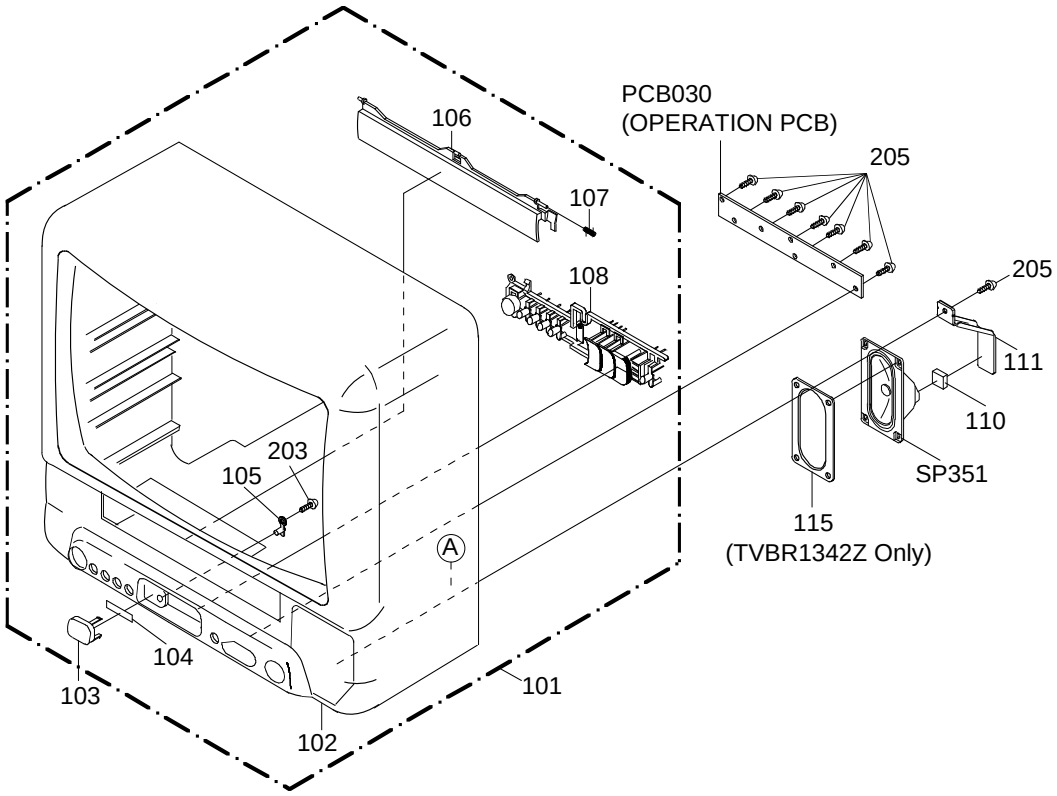

TVBR2542Z MECHANICAL EXPLODED VIEW

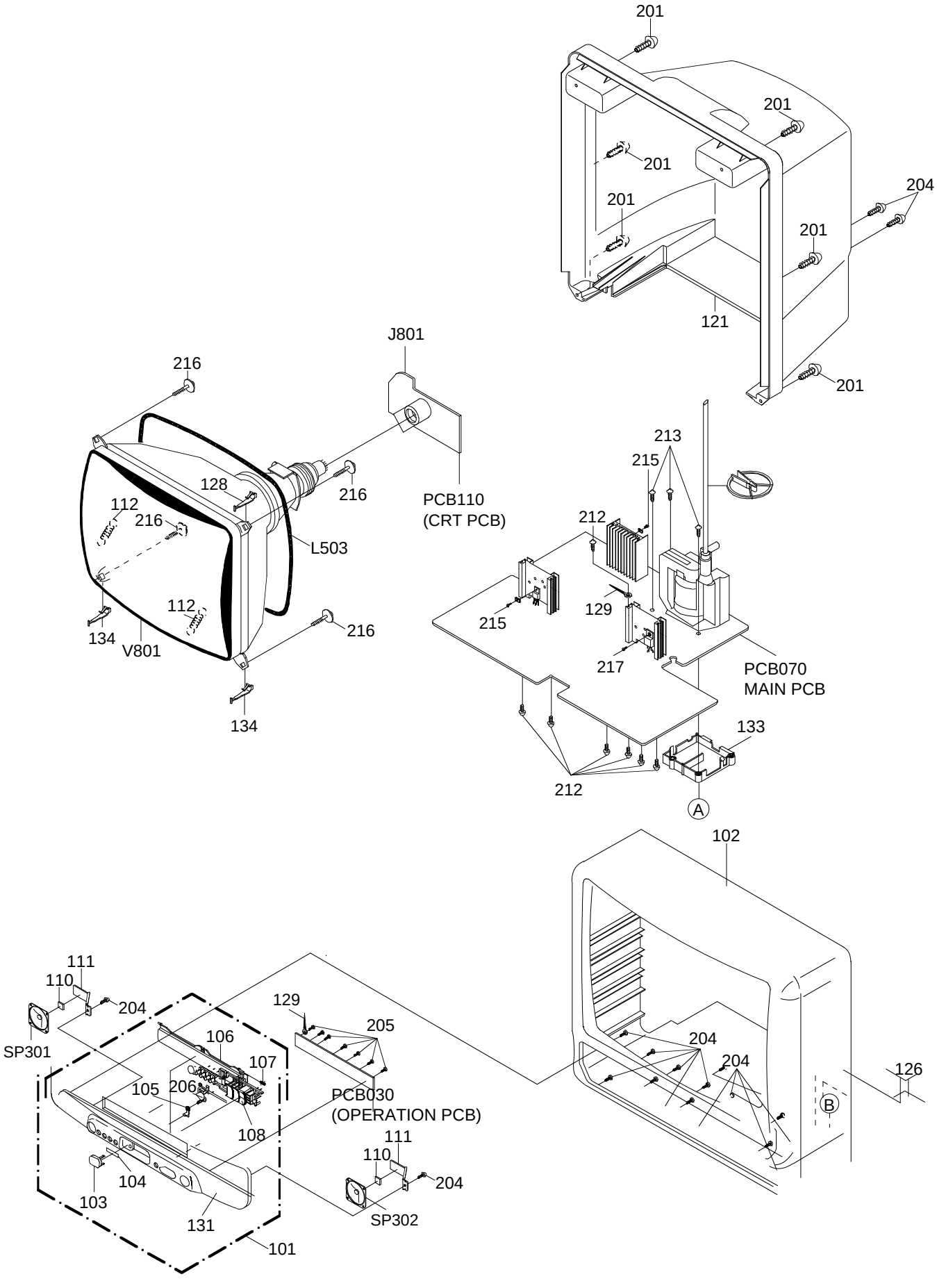

TVBR 13/1942Z MECHANICAL EXPLODED VIEW

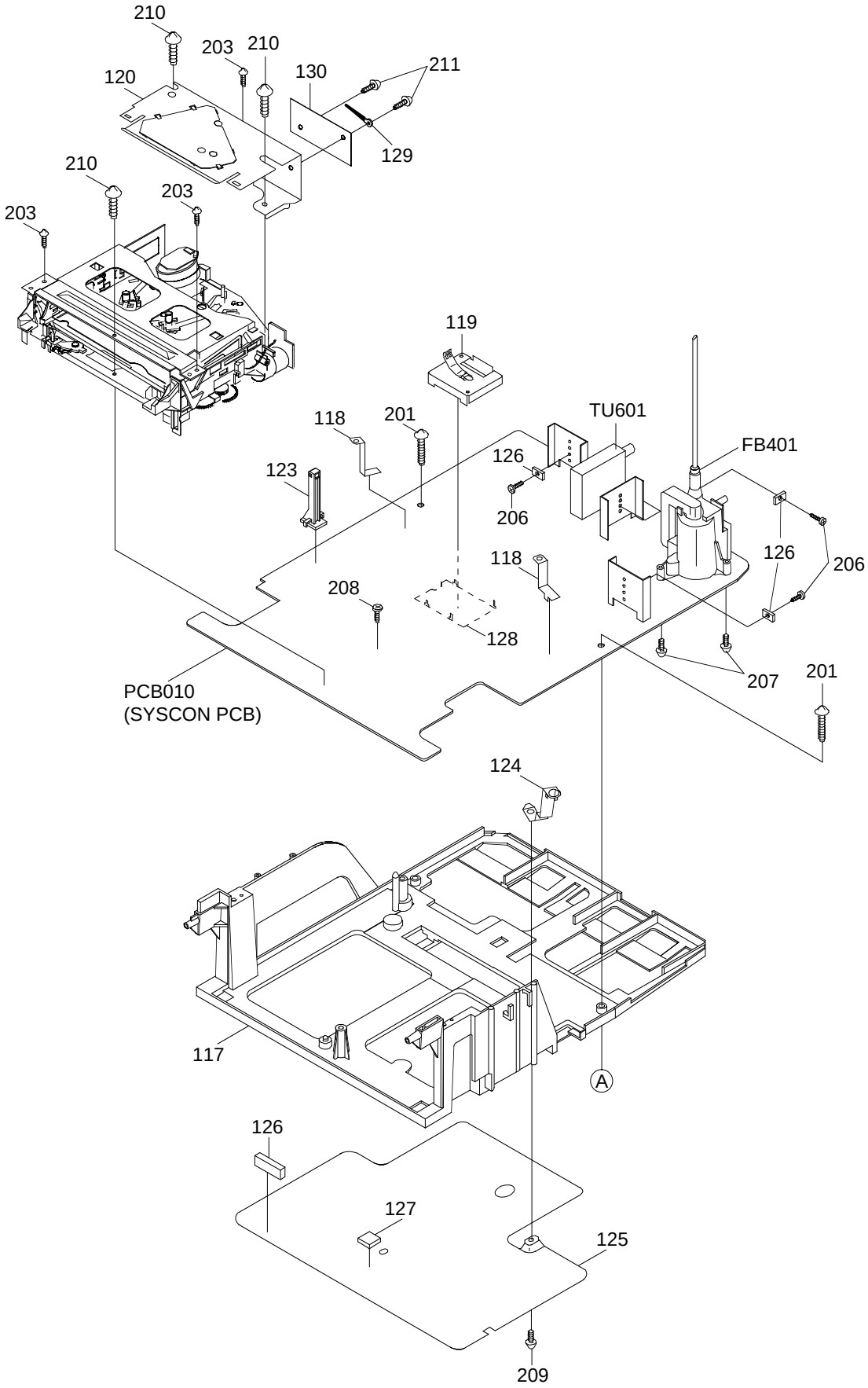

TVBR2542Z MECHANICAL EXPLODED VIEW

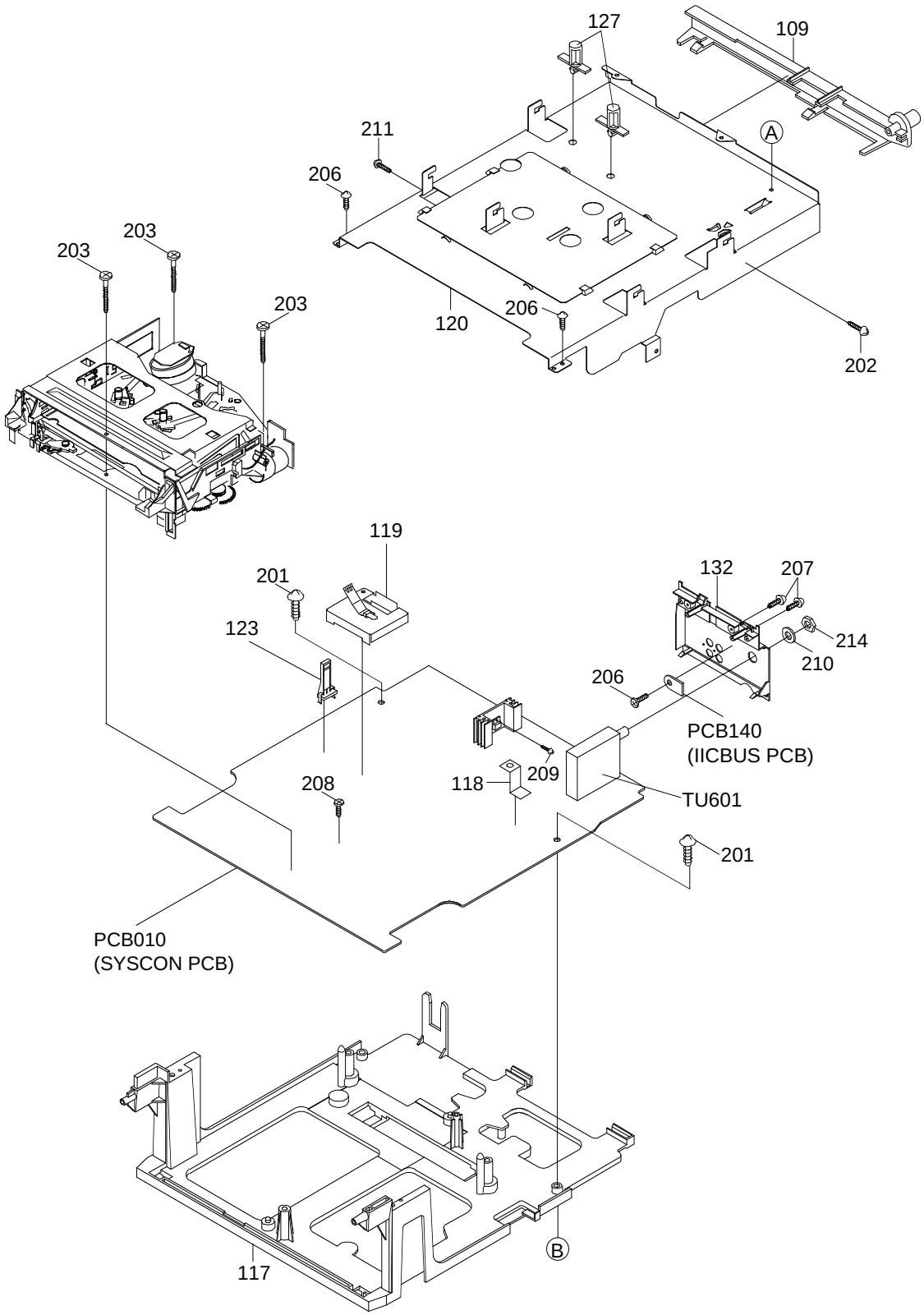

TVBR 13/19/2542Z UPPER DECK EXPLODED VIEW

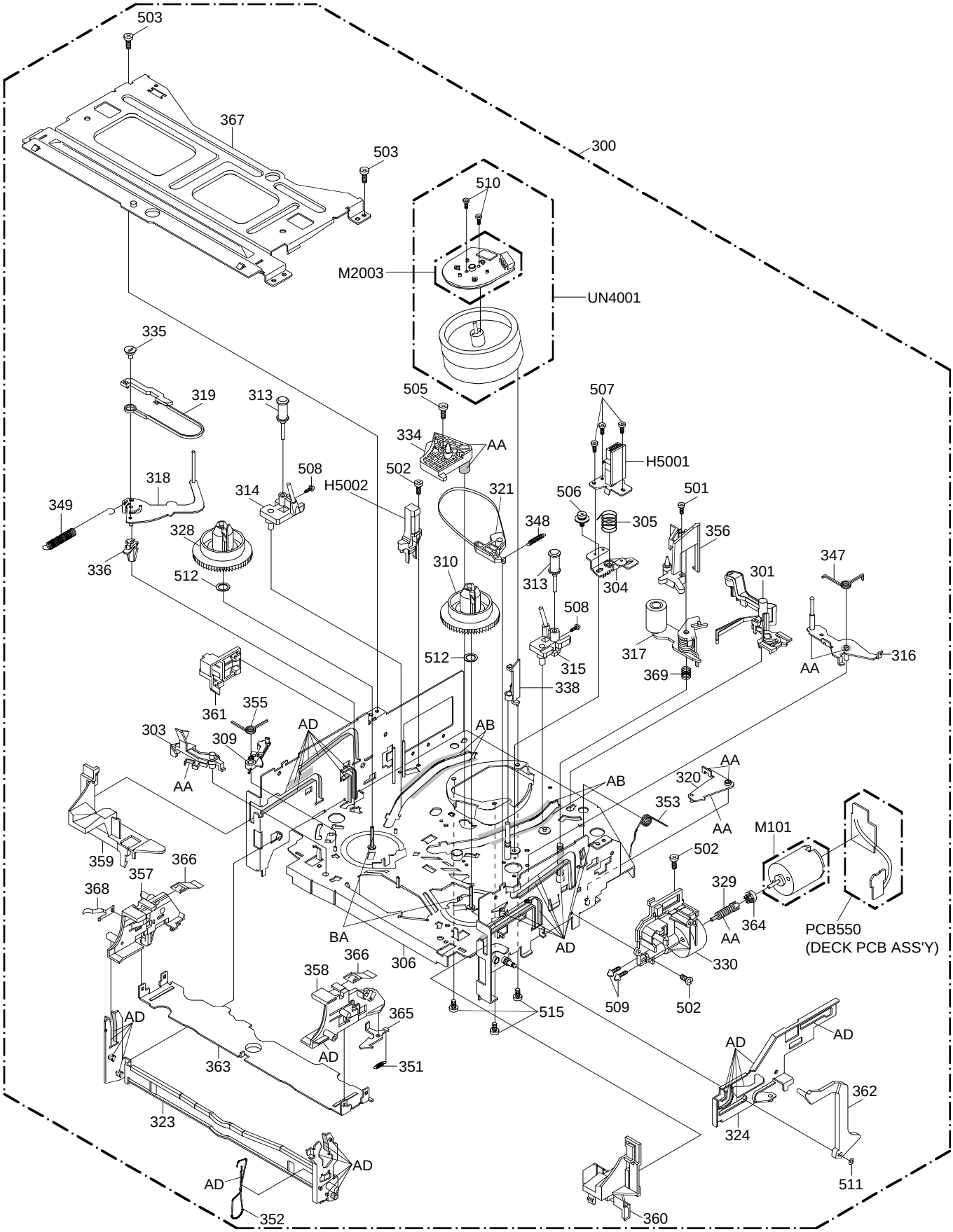

TVBR 13/19/2542Z LOWER DECK EXPLODED VIEW

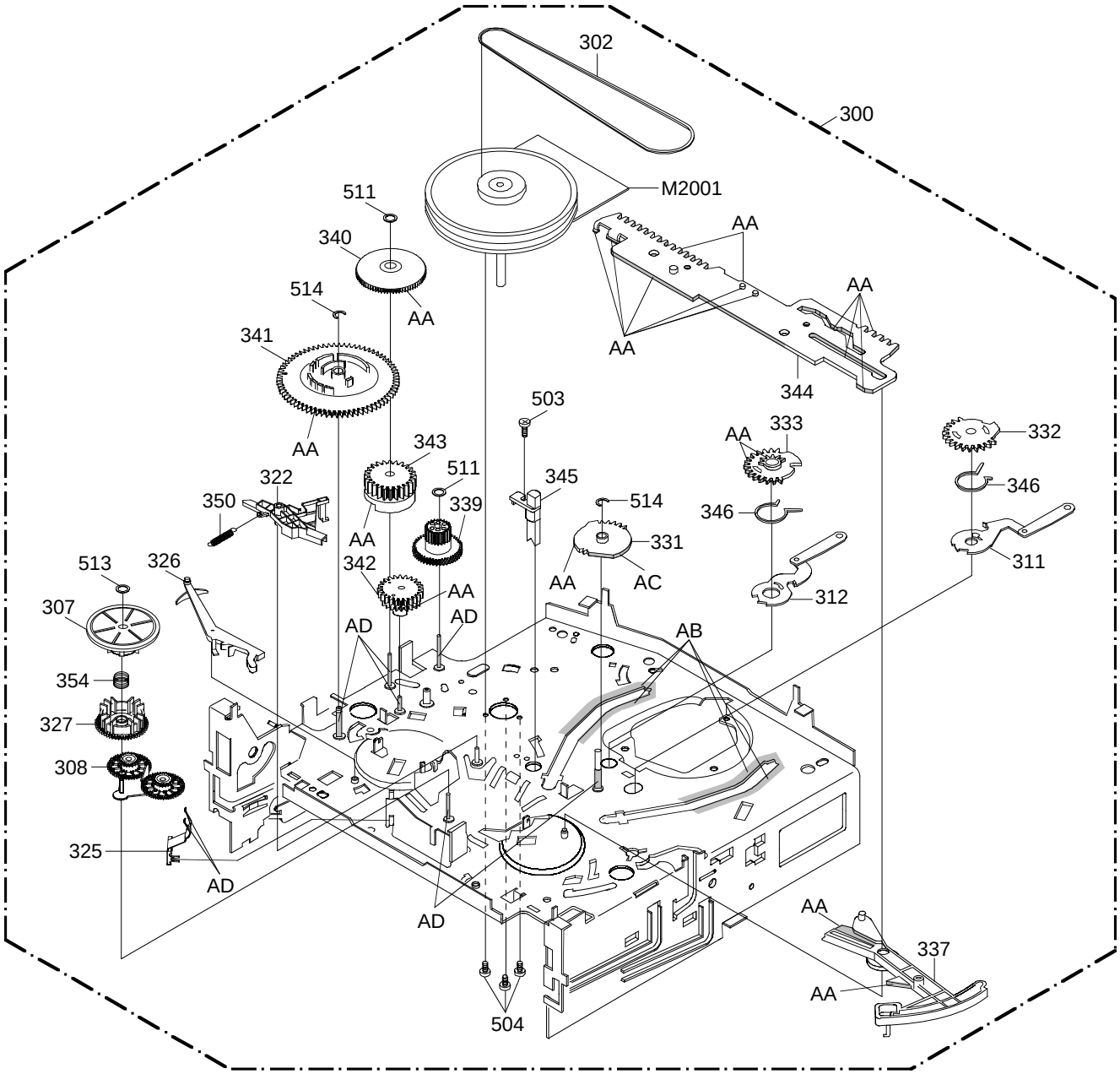

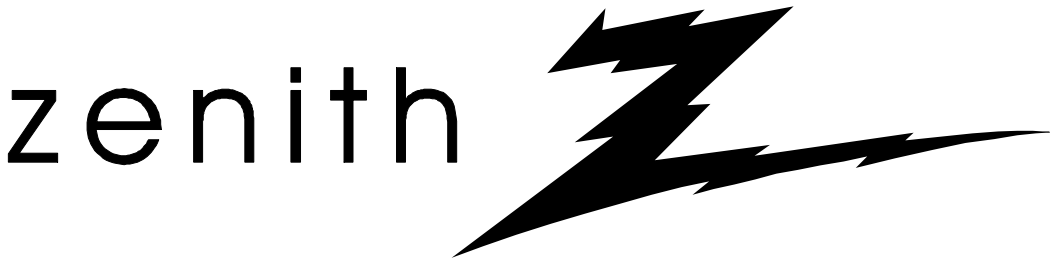
zenith

13/19" Interconnect Diagram

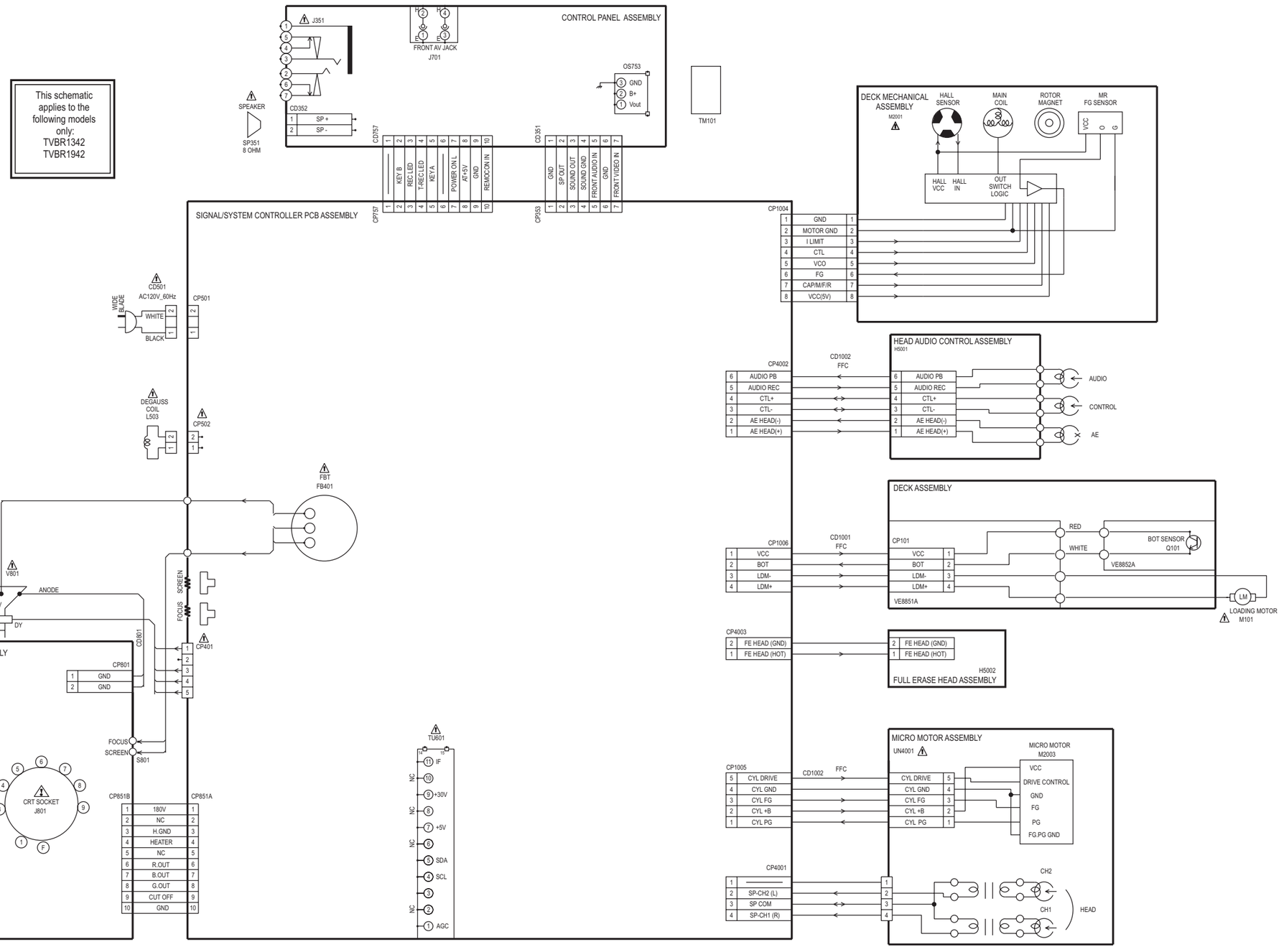

CRITICAL SAFETY COMPONENTS ARE IDENTIFIED BY THE SYMBOL ⚠.
REPLACE ONLY WITH PART NUMBERS SPECIFIED.

P/L = See parts list for part description PROV = Provisional

13/19" Main Micro Block Diagram

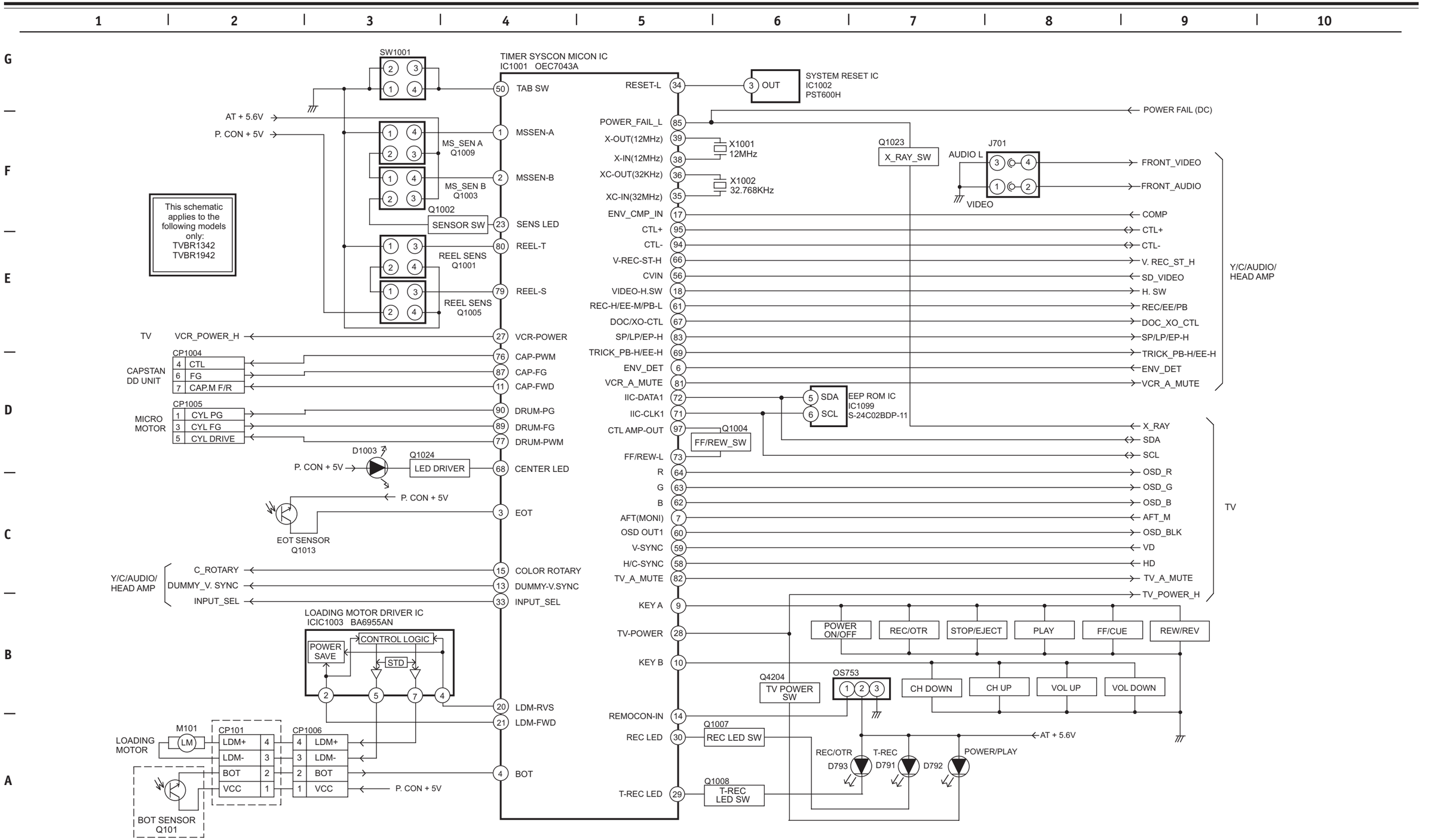

CRITICAL SAFETY COMPONENTS ARE IDENTIFIED BY THE SYMBOL ⚠.
REPLACE ONLY WITH PART NUMBERS SPECIFIED.

P/L = See parts list for part description PROV = Provisional

13/19" Audio Block Diagram

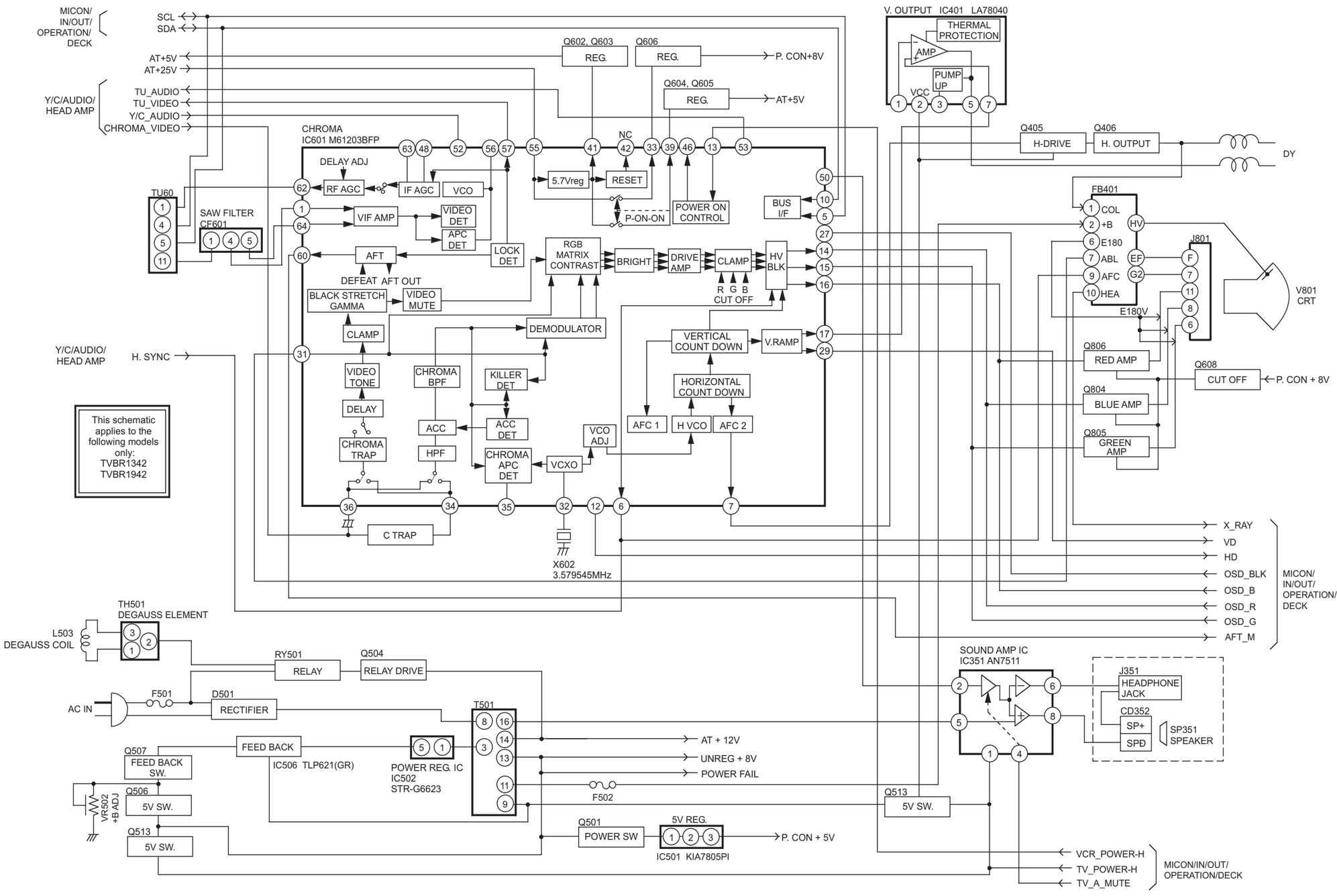

CRITICAL SAFETY COMPONENTS ARE IDENTIFIED BY THE SYMBOL ⚠.
REPLACE ONLY WITH PART NUMBERS SPECIFIED.

P/L = See parts list for part description PROV = Provisional

13/19" Video Block Diagram

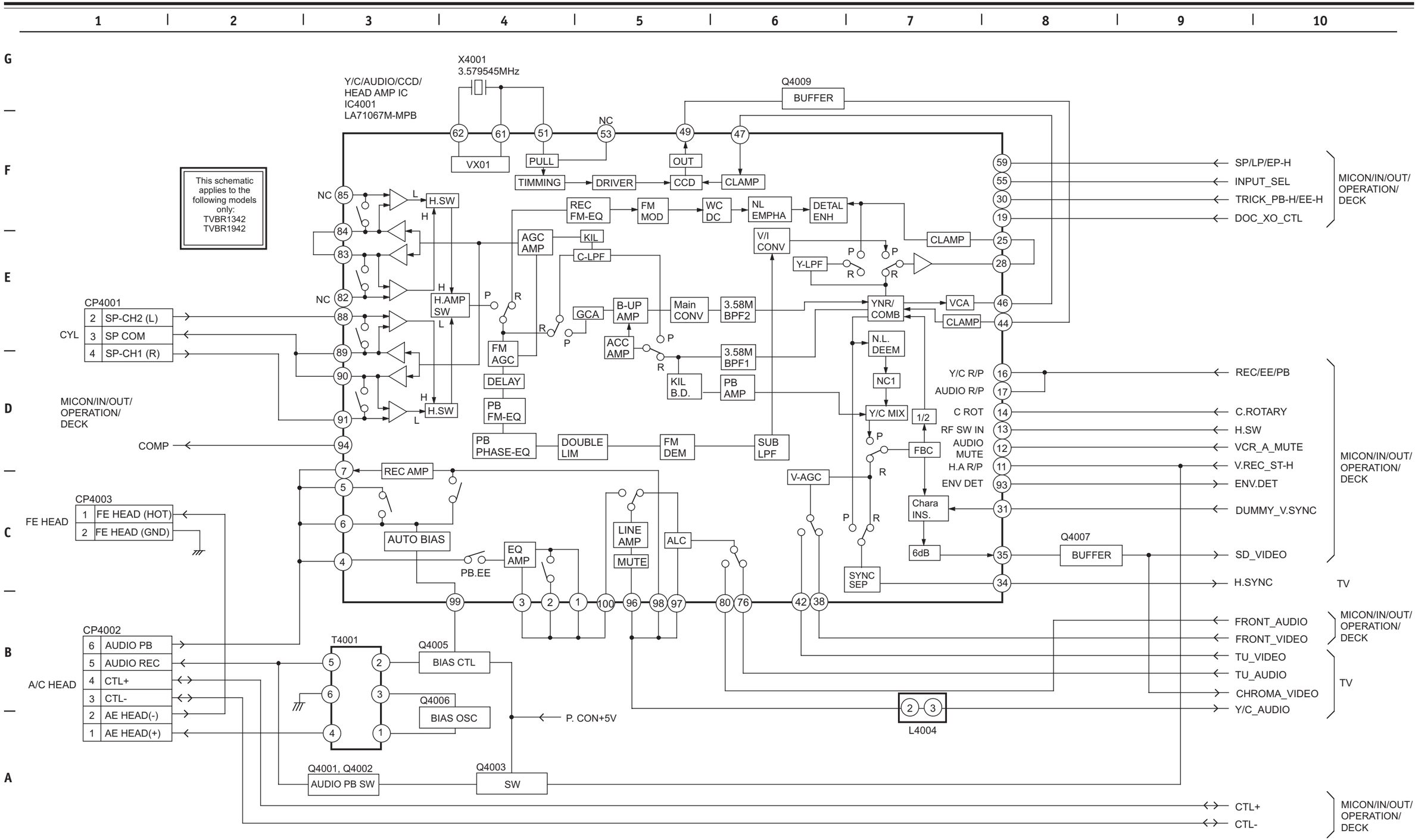

CRITICAL SAFETY COMPONENTS ARE IDENTIFIED BY THE SYMBOL ⚠.
REPLACE ONLY WITH PART NUMBERS SPECIFIED.

P/L = See parts list for part description PROV = Provisional

25" Interconnect Diagram

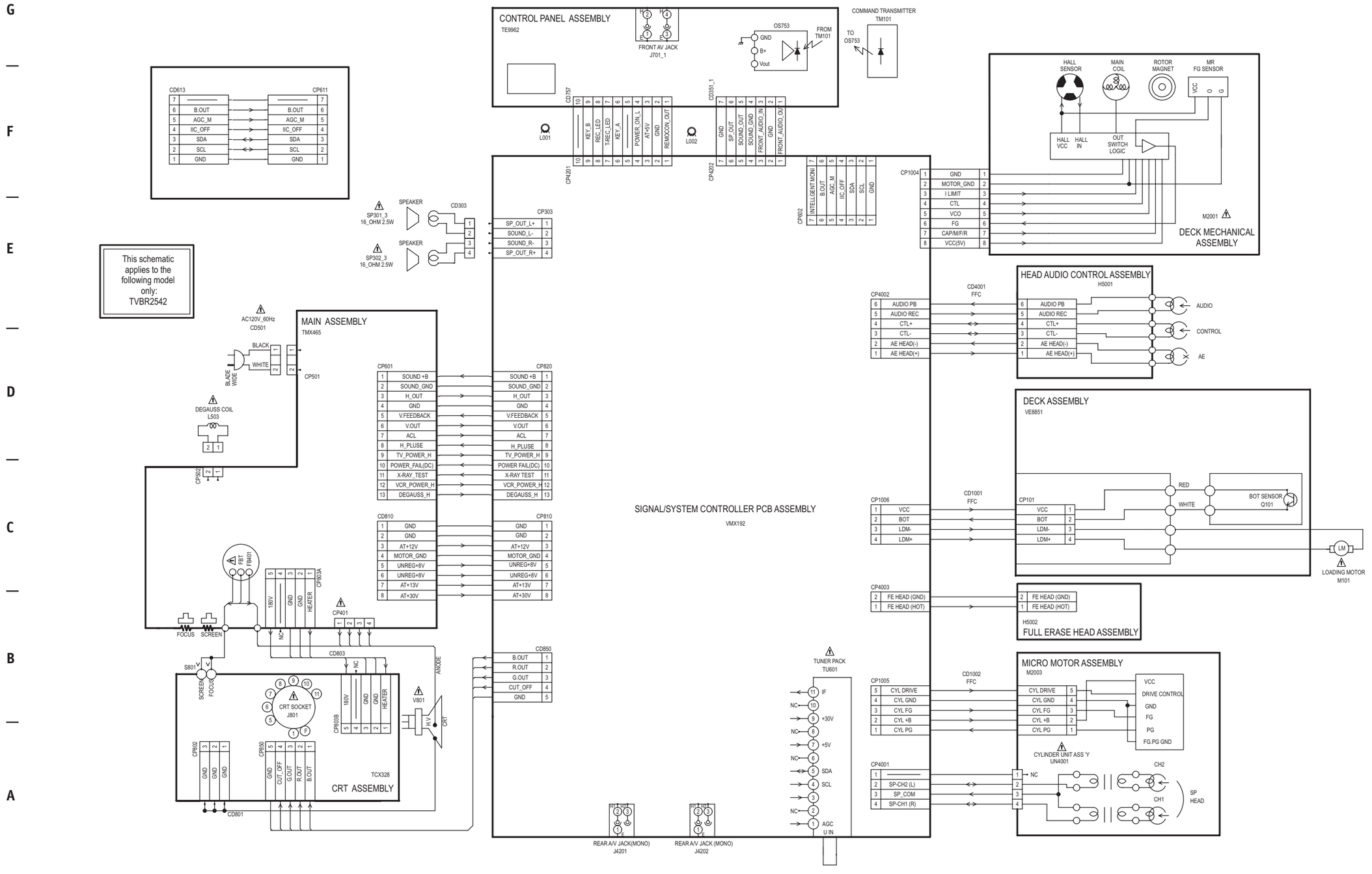

CRITICAL SAFETY COMPONENTS ARE IDENTIFIED BY THE SYMBOL ⚠.
REPLACE ONLY WITH PART NUMBERS SPECIFIED.

P/L = See parts list for part description PROV = Provisional

25" Main IC Block Diagram

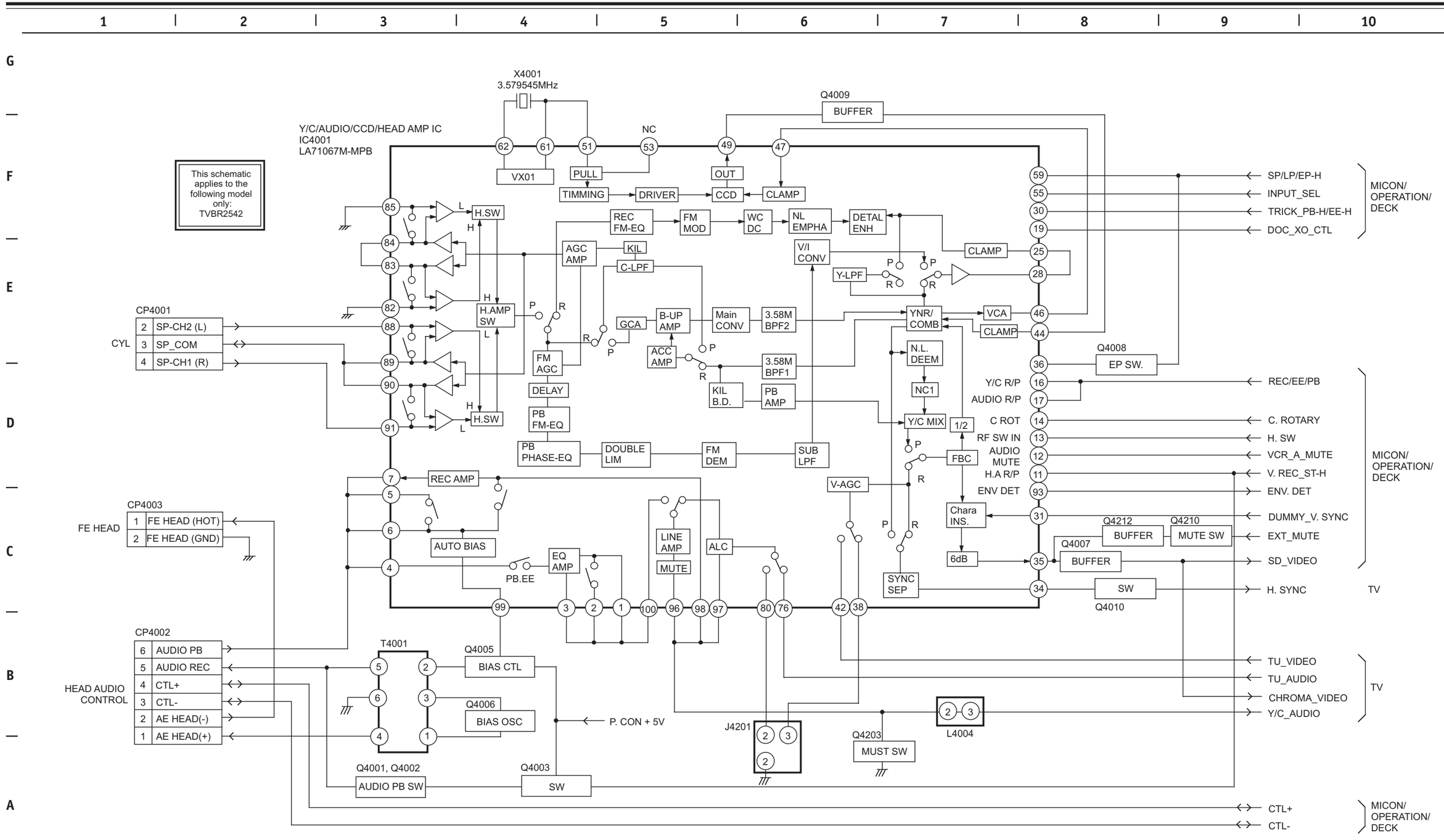

25" Audio IC Block Diagram

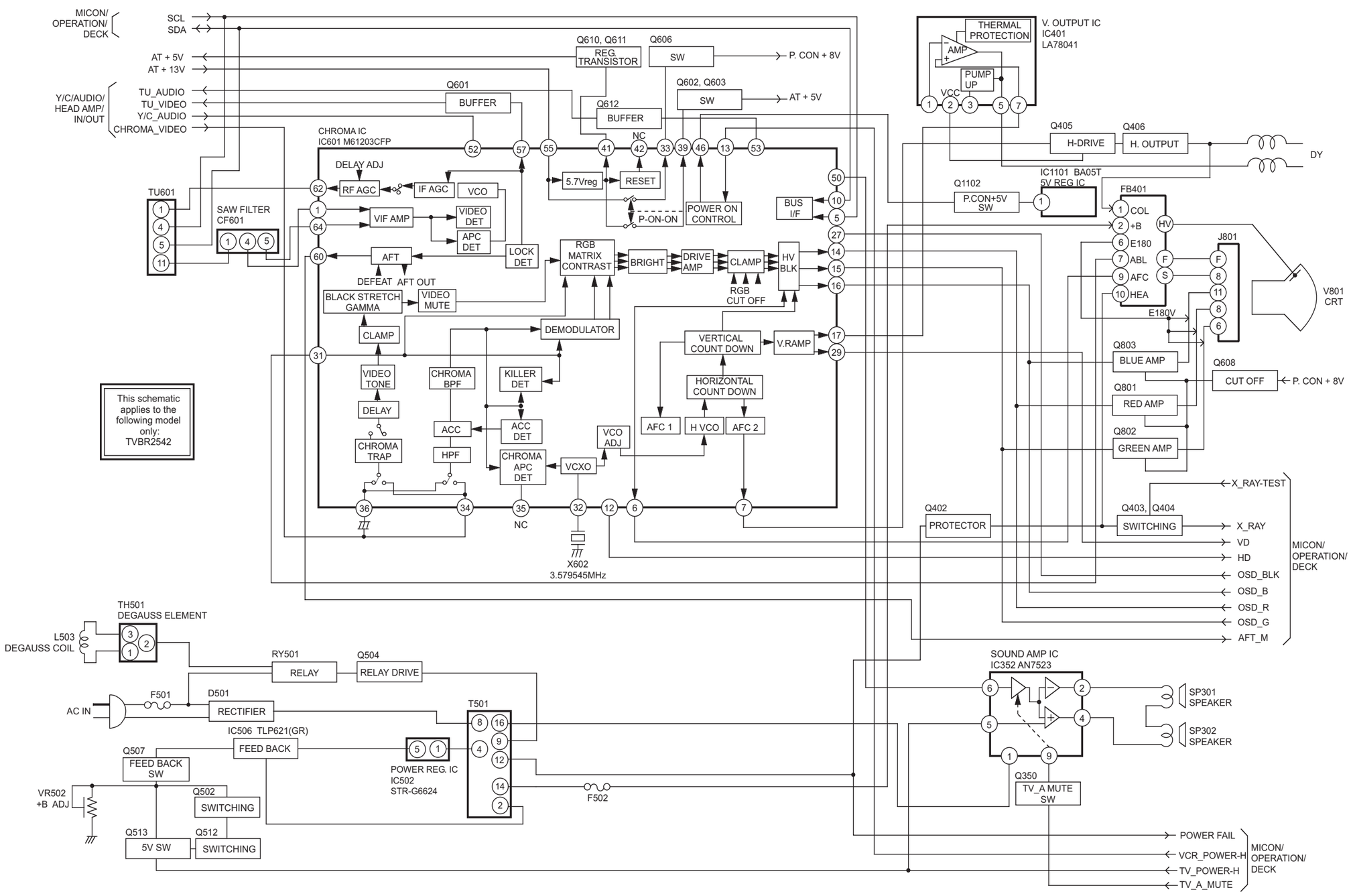

CRITICAL SAFETY COMPONENTS ARE IDENTIFIED BY THE SYMBOL ⚠.
REPLACE ONLY WITH PART NUMBERS SPECIFIED.

P/L = See parts list for part description PROV = Provisional

25" Video IC Block Diagram

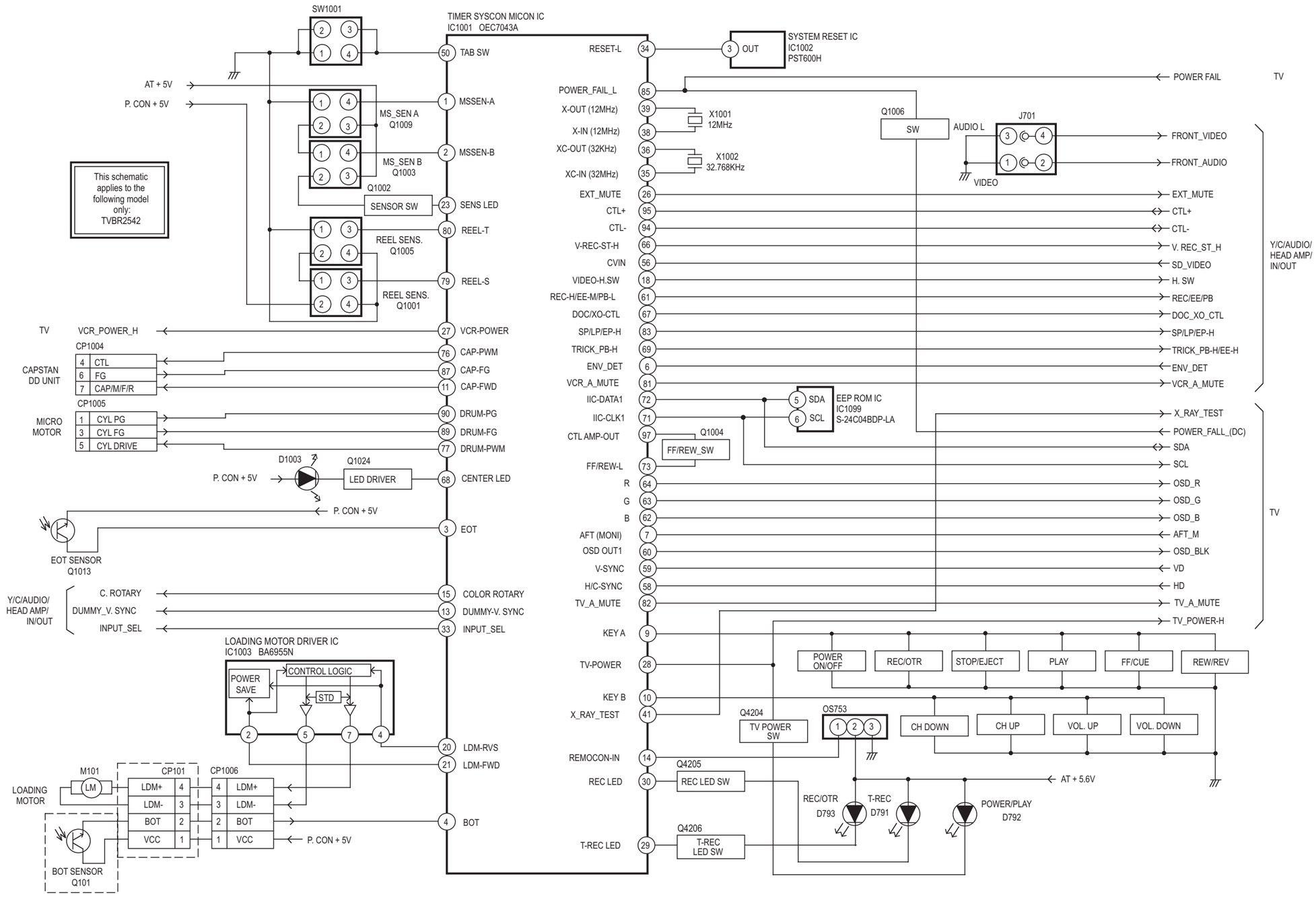

CRITICAL SAFETY COMPONENTS ARE IDENTIFIED BY THE SYMBOL ⚠.
REPLACE ONLY WITH PART NUMBERS SPECIFIED.

P/L = See parts list for part description PROV = Provisional

13/19" Primary Power Circuit

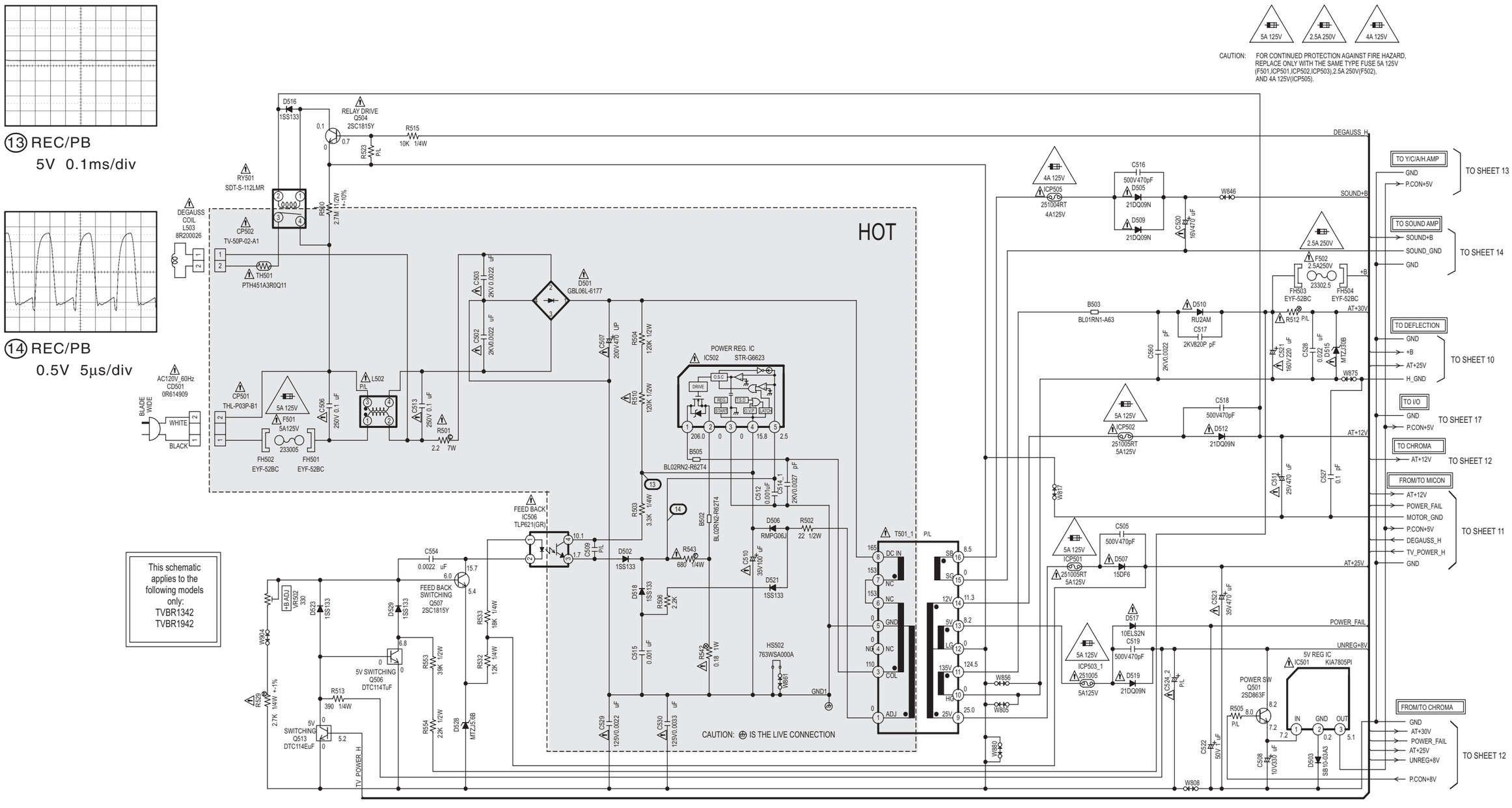

13/19" Deflection Circuit

This schematic applies to the following models only:
TVBR1342
TVBR1942

V.OUTPUT IC
IC401 LA78040
THERMAL PROTECTION
AMP
PUMP UP
Vcc
GND
1 3.6 | 2 25.9 | 3 2.0 | 4 0 | 5 12.5 | 6 26.3 | 7 3.7

HORIZONTAL SIGNAL
VERTICAL SIGNAL

DRIVER
Q402
2SB892

FROM MICRO
TV_POWER_H
SWITCHING
Q401
DTC143EKA

FROM/TO CHROMAF
V_OUT
V_FEEDBACK
GND
H_OUT
ACL
H.PLUSE
F_P.CON+15V
HEATER
H_GND
180V

TO SHEET 11
TO SHEET 12
TO SHEET 9

FROM TV POWER
AT+25V
GND
H_GND
+B

FROM/TO MICRO
X_RAY
X-RAY_TEST
SWITCHING
Q403
DTC114TKA

SWITCHING
Q404
DTA144EKA

H-DRIVE
Q405
2SC2271

H.OUTPUT
Q406
2SD2627LS-CBC11

HS401_1
763WSA0004

HS402
763WSA0004

19" ONLY

TO DY
CP401
B05B-DVS

V801
A48AGY13X77

CD801
8M82025A

FB401 P/L
COL
E180
B+
AFC
HEATER
GND
E12
E27
GND
E8

FOCUS
SCREEN

15 0.5V 5ms/div

16 1V 10ms/div

17 5V 20µs/div

18 0.5V 20µs/div

CRITICAL SAFETY COMPONENTS ARE IDENTIFIED BY THE SYMBOL ⚠.
REPLACE ONLY WITH PART NUMBERS SPECIFIED.

P/L = See parts list for part description PROV = Provisional

13/19" Main Microprocessor Circuit

1 | 2 | 3 | 4 | 5 | 6 | 7 | 8 | 9 | 10

G F E D C B A

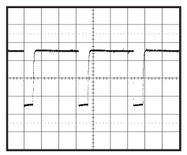

⑤ REC/PB
2V 20µs/div

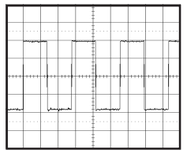

⑩ REC/PB
1V 0.5ms/div

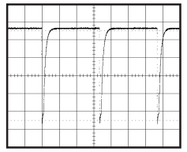

⑥ REC/PB
1V 5ms/div

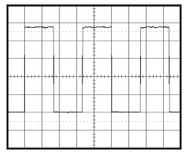

⑪ REC/PB
1V 10ms/div

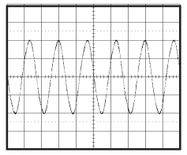

⑦ REC/PB
1V 50ns/div

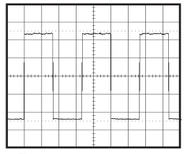

⑧ REC/PB
1V 10ms/div

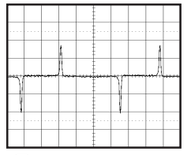

⑨ PB
1V 2ms/div

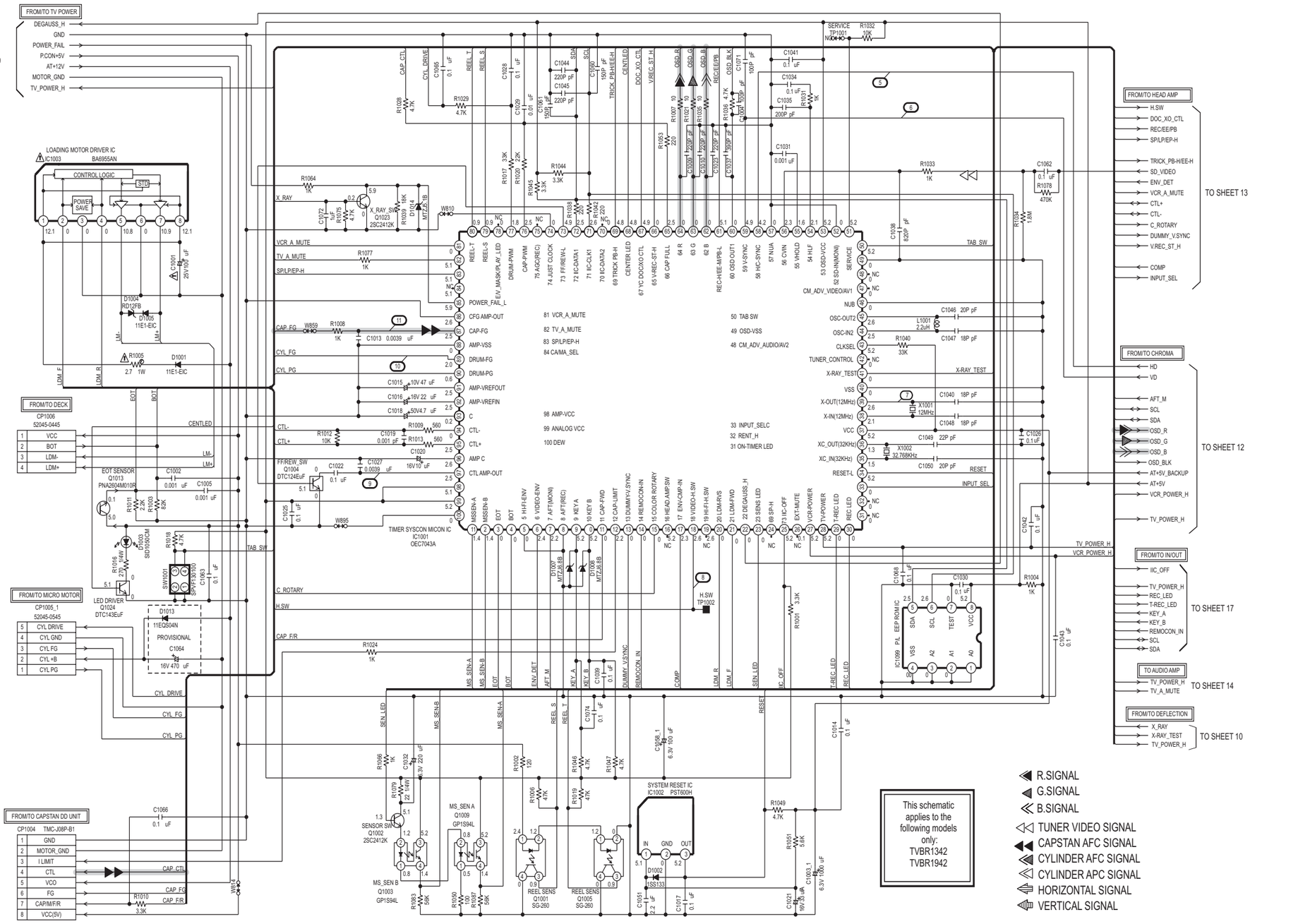

13/19" Chroma Circuit

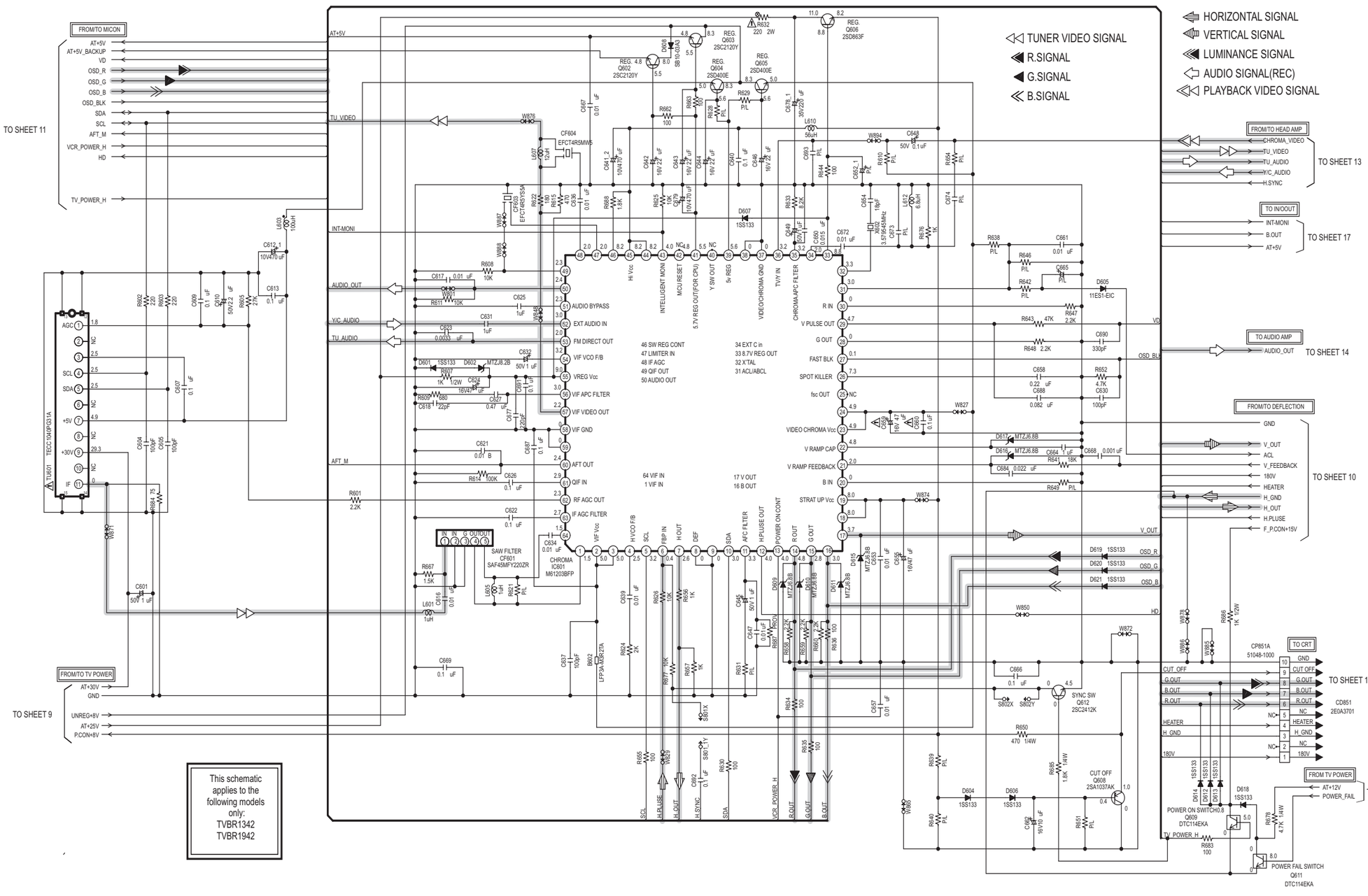

This schematic applies to the following models only:
TVBR1342
TVBR1942

CRITICAL SAFETY COMPONENTS ARE IDENTIFIED BY THE SYMBOL ⚠.
REPLACE ONLY WITH PART NUMBERS SPECIFIED.

P/L = See parts list for part description PROV = Provisional

13/19" Head Amp Circuit

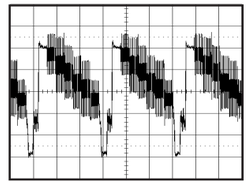

① REC/PB
0.5V 20µs/div

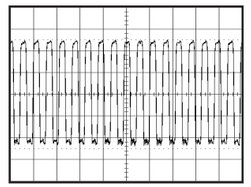

② REC/PB
100mV 0.5µs/div

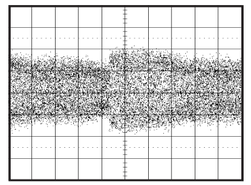

③ PB
100mV 5ms/div

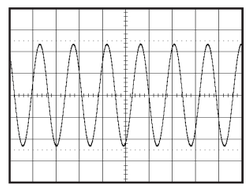

④ REC
20V 10µs/div

◀ PLAYBACK LUMINANCE SIGNAL
◀◁ PLAYBACK VIDEO SIGNAL
◁ AUDIO SIGNAL(REC)
◀ AUDIO SIGNAL(PB)
◁ TUNER VIDEO SIGNAL
◀◁ RECORD LUMINANCE SIGNAL
◀◁ RECORD COLOR SIGNAL

This SCHEMATIC applies to the following models only:
TVBR1342
TVBR1942

13/19" Audio Amp Circuit

1 | 2 | 3 | 4 | 5 | 6 | 7 | 8 | 9 | 10

G

F

E

D

C

B

A

This schematic applies to the following models only:
TVBR1342
TVBR1942

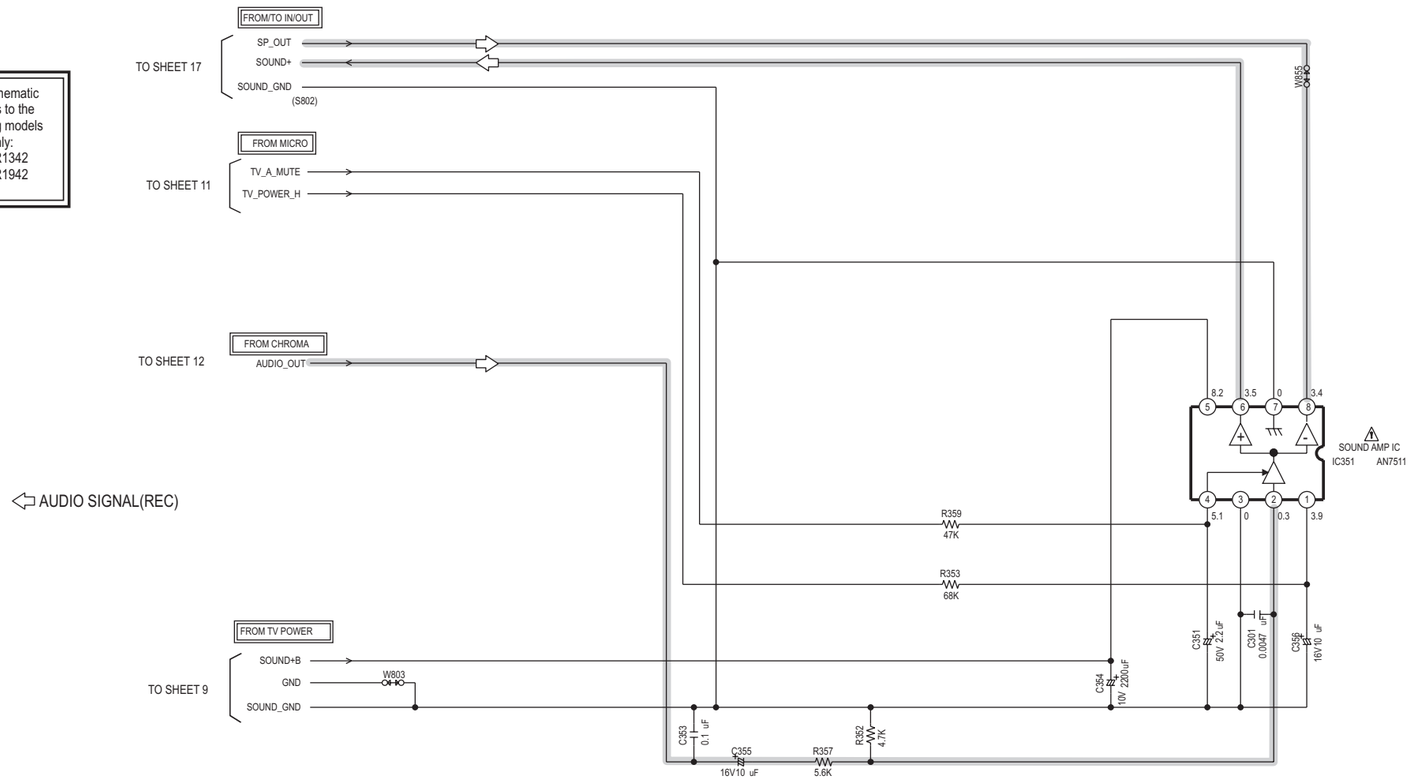

13/19" CRT Circuit

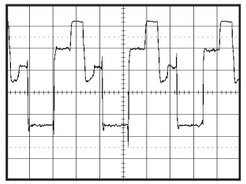

⑲ 20.0V 20µs/div

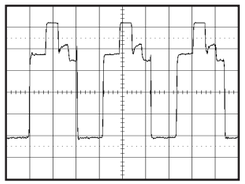

⑳ 20.0V 20µs/div

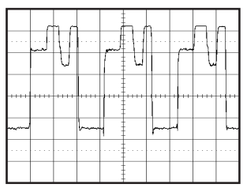

㉑ 20.0V 20µs/div

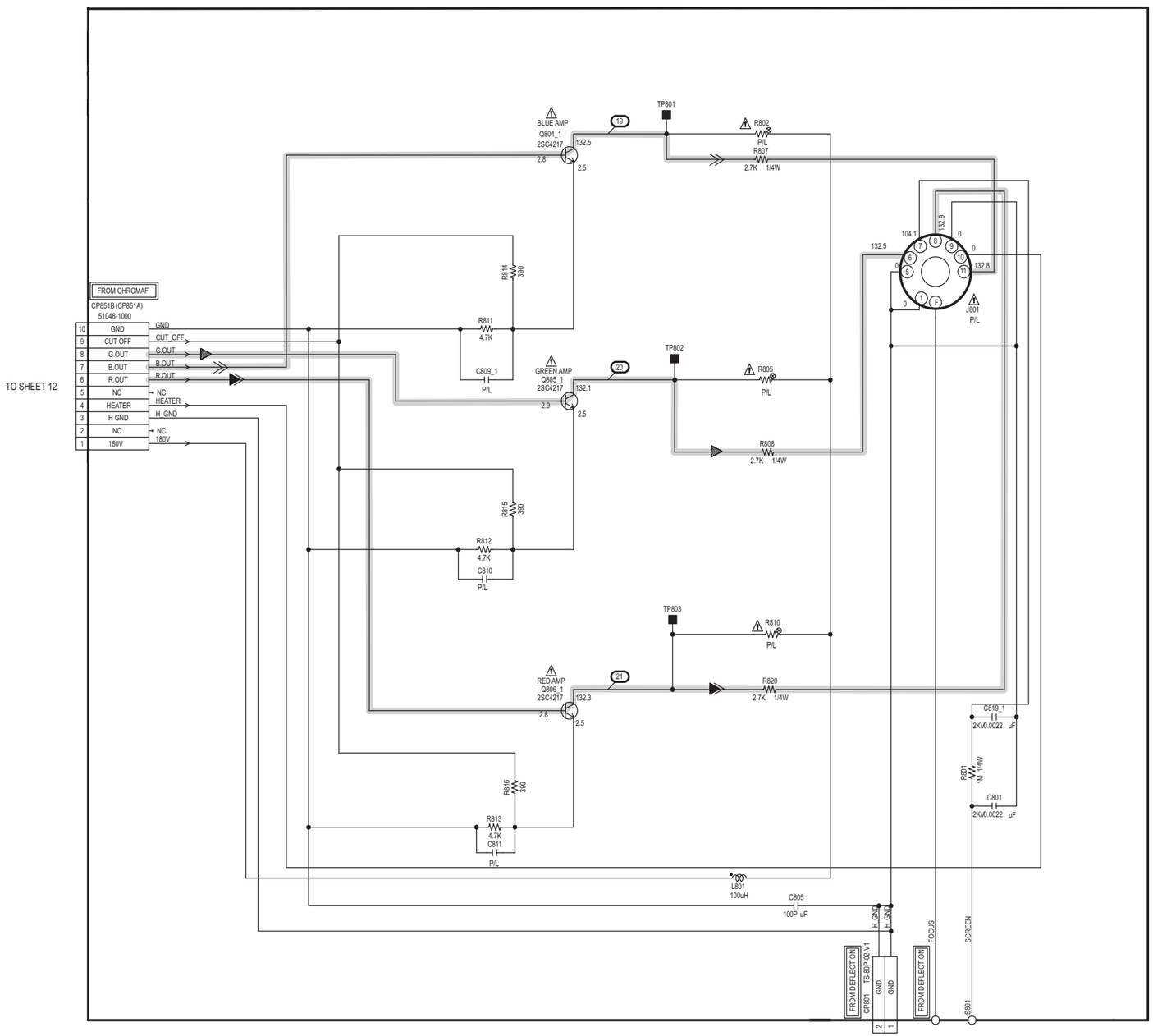

This schematic applies to the following models only:
TVBR1342
TVBR1942

CRITICAL SAFETY COMPONENTS ARE IDENTIFIED BY THE SYMBOL ⚠.
REPLACE ONLY WITH PART NUMBERS SPECIFIED.

P/L = See parts list for part description PROV = Provisional

13/19" Deck Circuit

1 | 2 | 3 | 4 | 5 | 6 | 7 | 8 | 9 | 10

G

F

E

D

C

B

A

This schematic applies to the following models only:
TVBR1342
TVBR1942

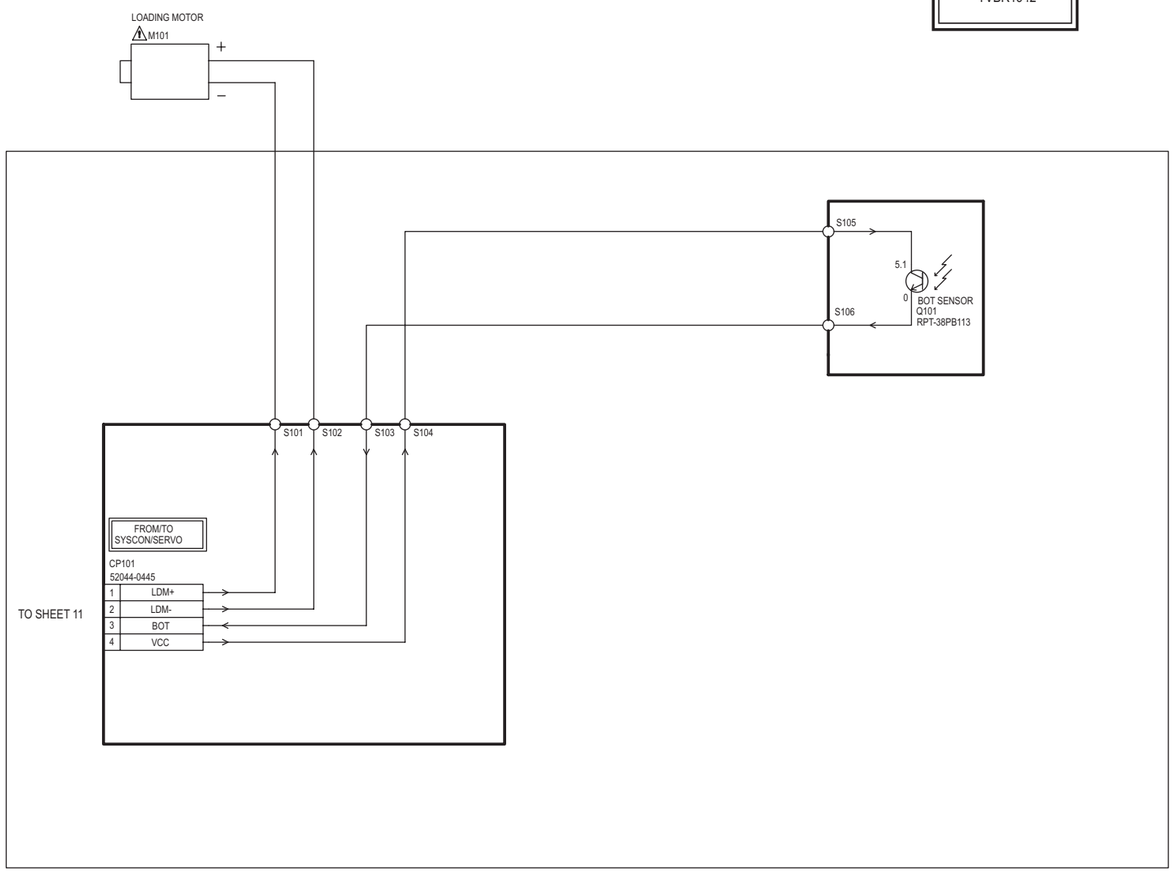

13/19" Input/Output Circuit

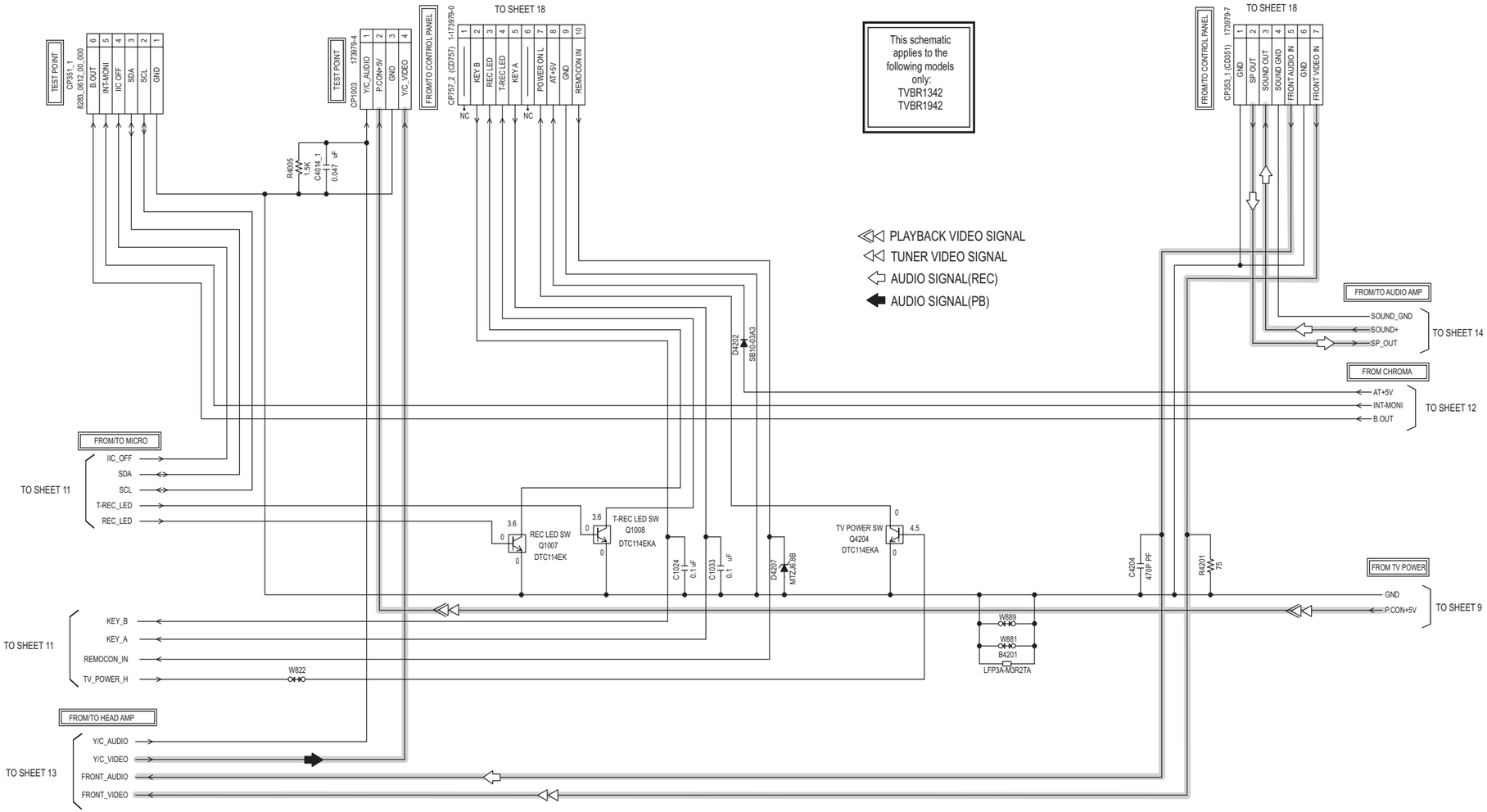

13/19" Control Panel Circuit

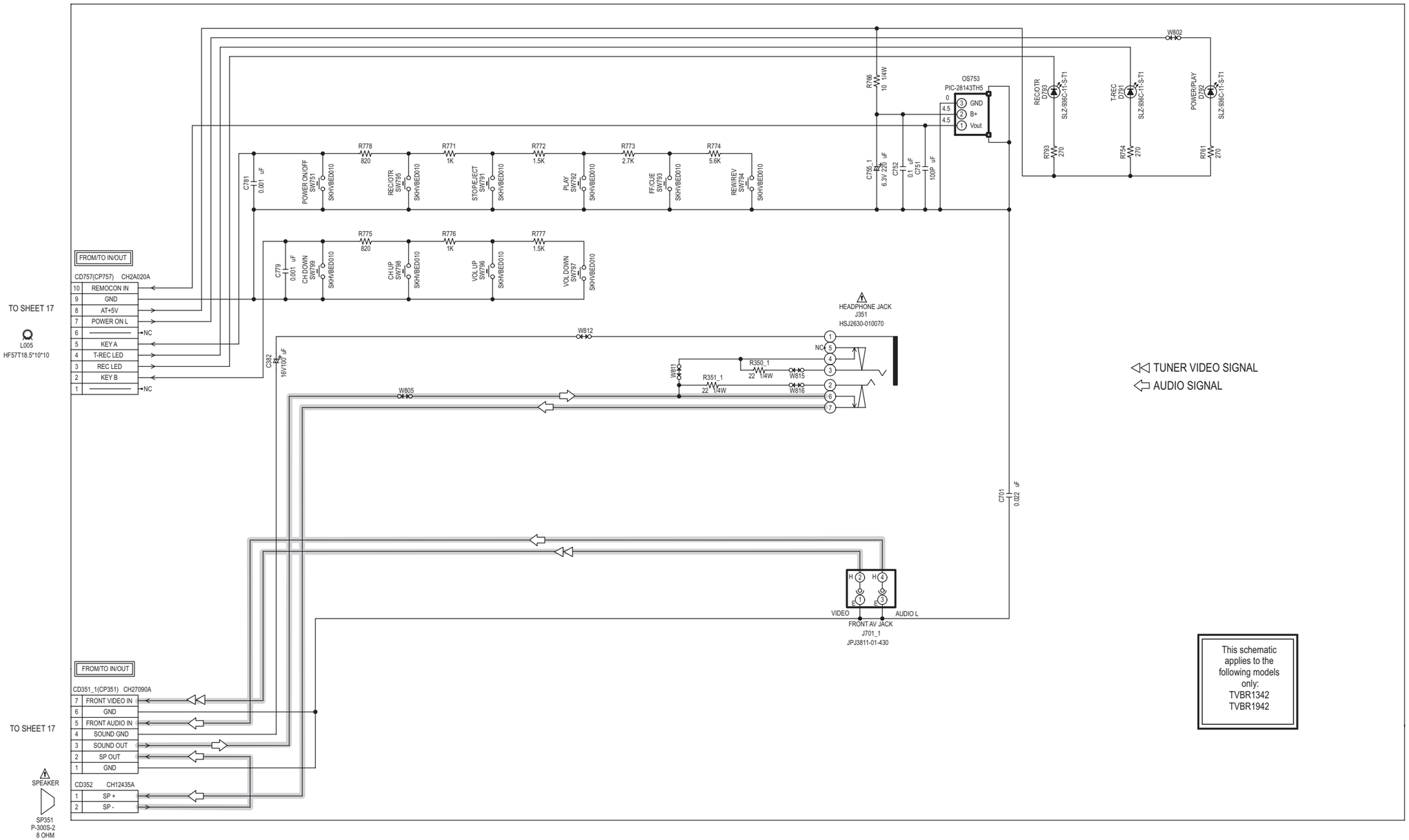

CRITICAL SAFETY COMPONENTS ARE IDENTIFIED BY THE SYMBOL ⚠.
REPLACE ONLY WITH PART NUMBERS SPECIFIED.

P/L = See parts list for part description PROV = Provisional

25" Primary Power Circuit

1 | 2 | 3 | 4 | 5 | 6 | 7 | 8 | 9 | 10

G F E D C B A

6.3A 125V 2.5A 125V

CAUTION: FOR CONTINUED PROTECTION AGAINST FIRE HAZARD, REPLACE ONLY WITH THE SAME TYPE FUSE.
5A 125V(ICP503) ,6.3A 125V(F501) ,2.5A 125V(F502)
5A 125V(ICP504), 4A 125V(ICP502) AND 2.5A 125V(ICP505)

This schematic applies to the following model only: TVBR2542

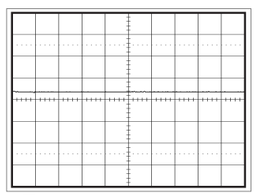

(13) REC/PB
5V 0.1ms/div

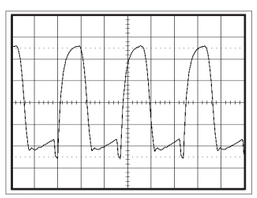

(14) REC/PB
0.5V 5µs/div

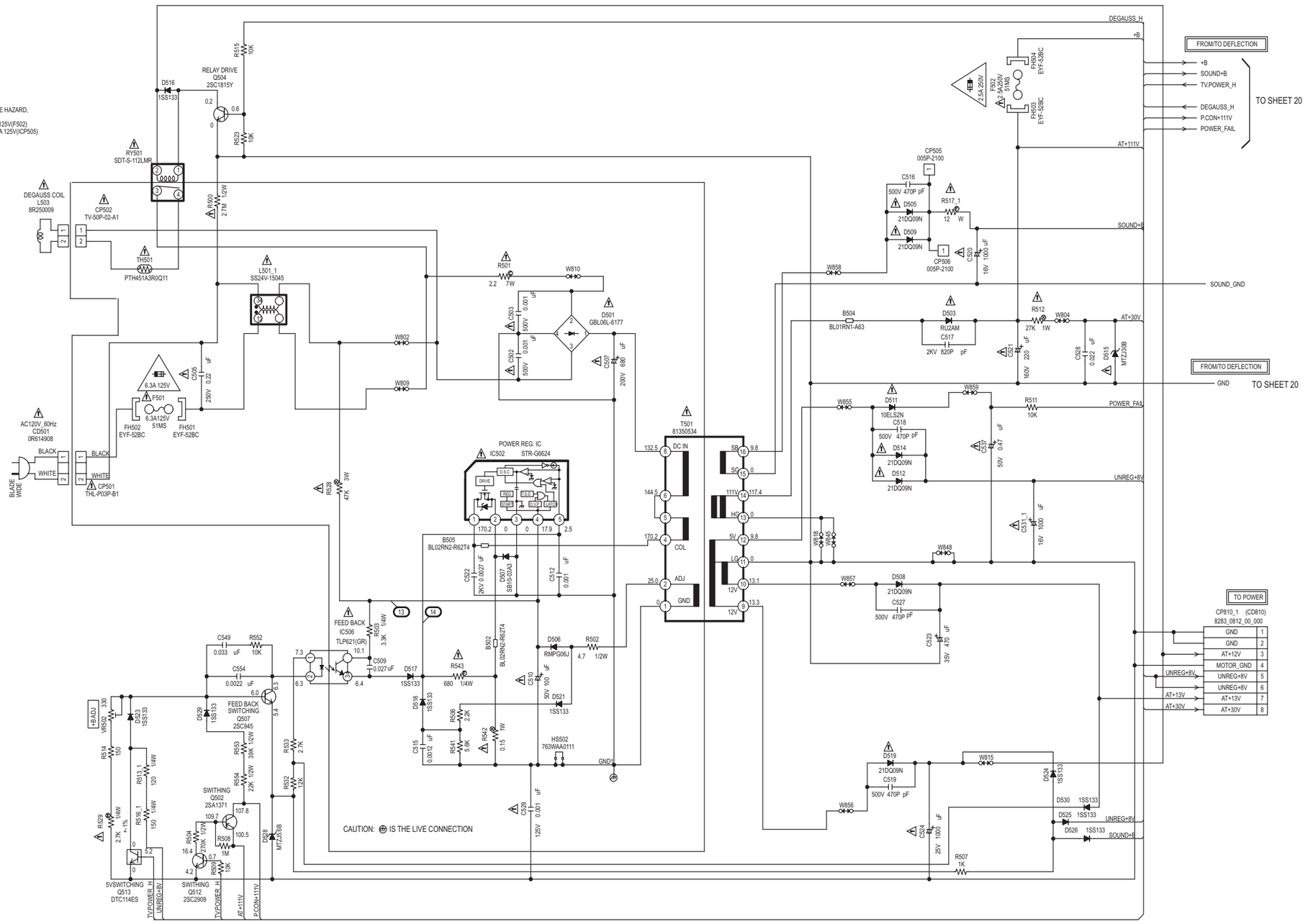

25" Deflection Circuit

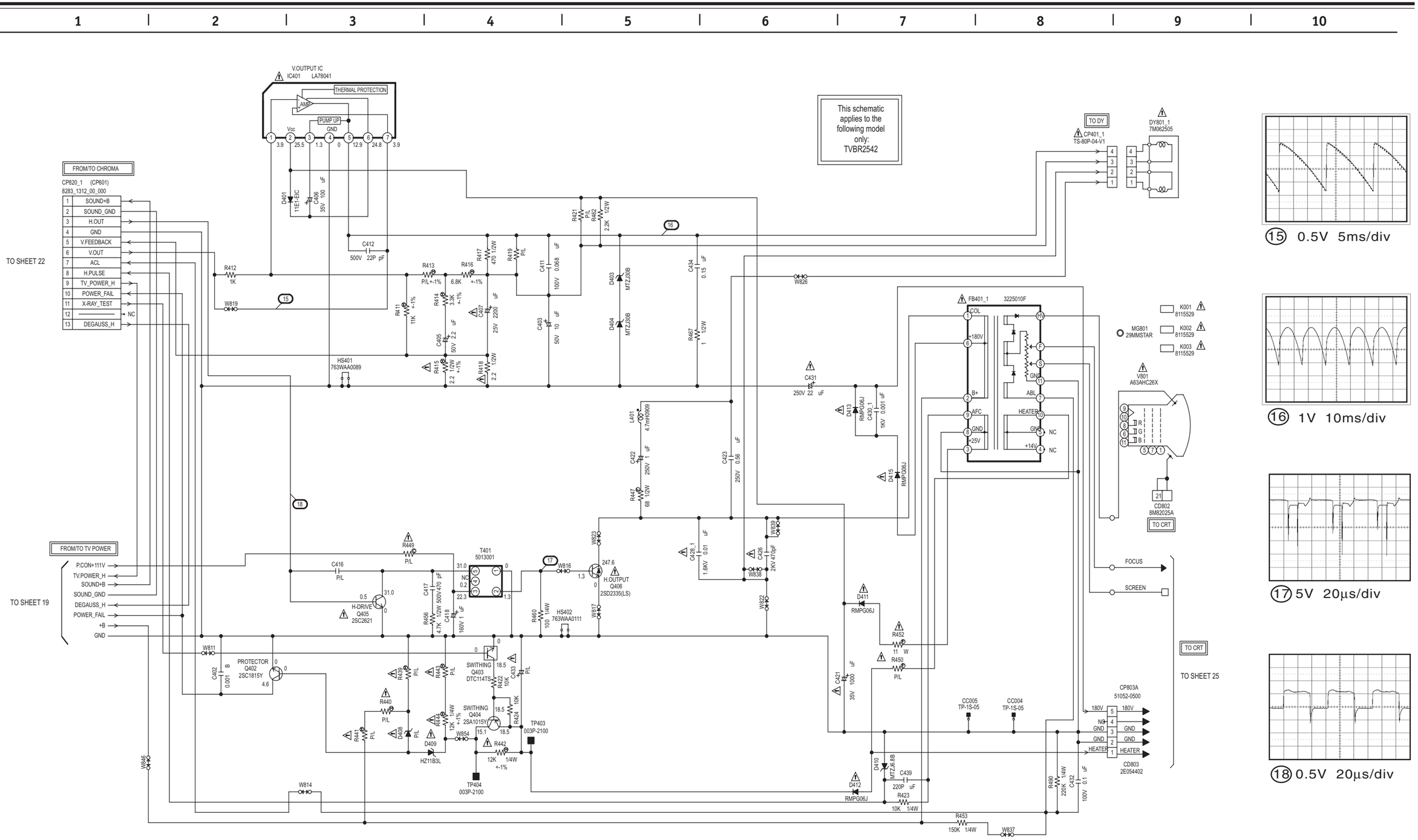

15 0.5V 5ms/div

16 1V 10ms/div

17 5V 20µs/div

18 0.5V 20µs/div

CRITICAL SAFETY COMPONENTS ARE IDENTIFIED BY THE SYMBOL ⚠.
REPLACE ONLY WITH PART NUMBERS SPECIFIED.

P/L = See parts list for part description PROV = Provisional

25" Main Micro Circuit

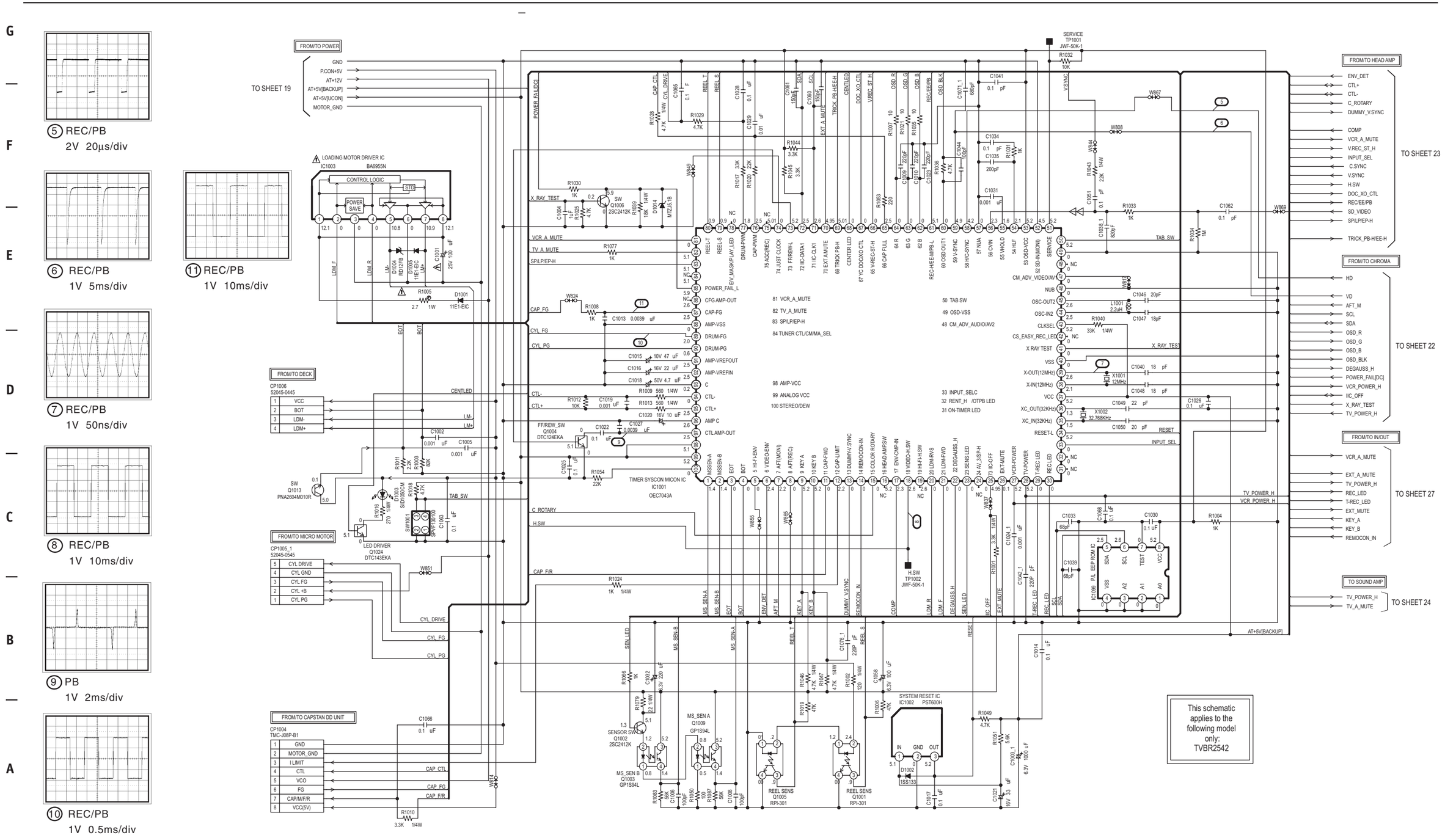

25" Chroma Circuit

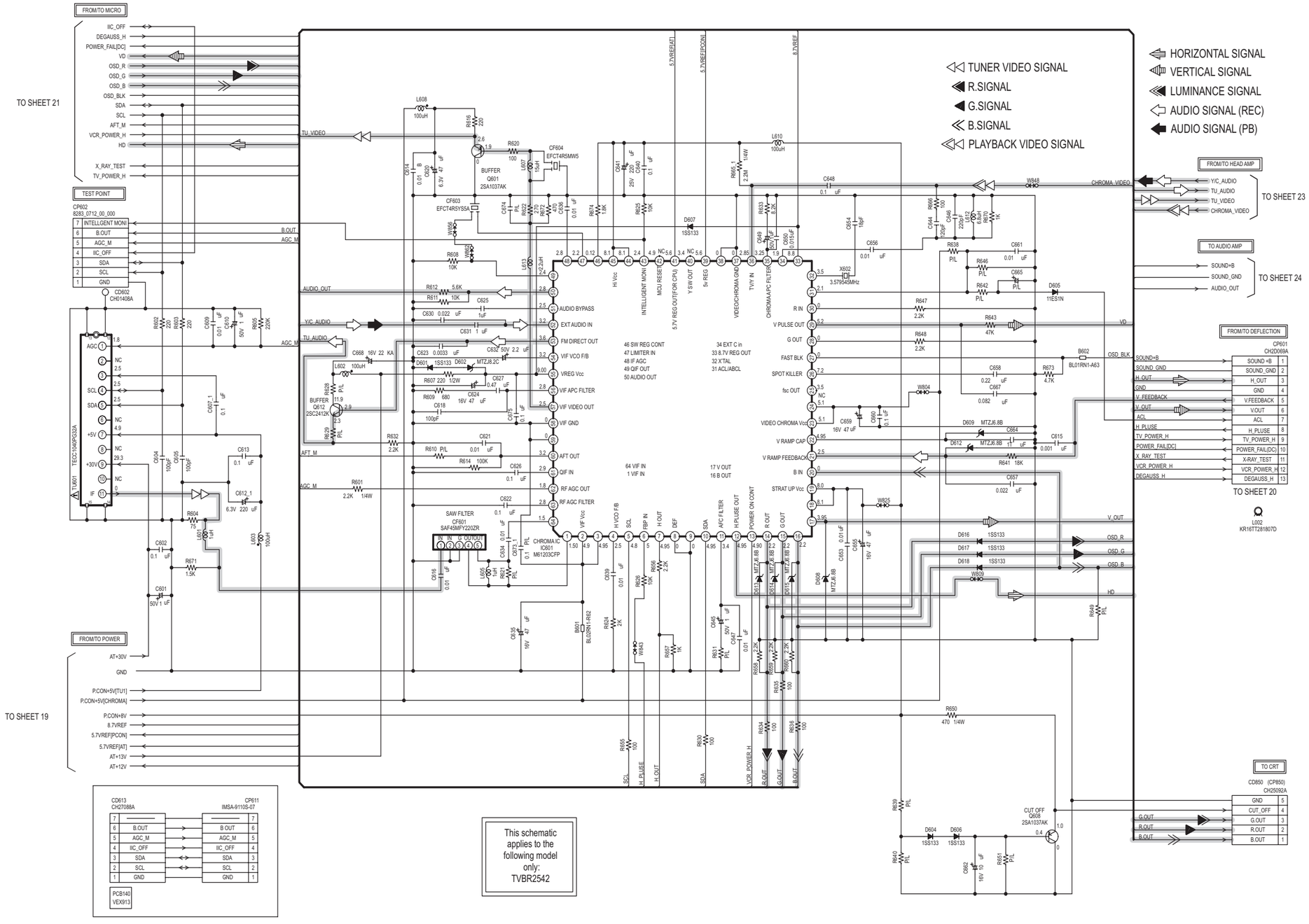

CRITICAL SAFETY COMPONENTS ARE IDENTIFIED BY THE SYMBOL ⚠.
REPLACE ONLY WITH PART NUMBERS SPECIFIED.

25" Head Amp Circuit

1 | 2 | 3 | 4 | 5 | 6 | 7 | 8 | 9 | 10

G F E D C B A

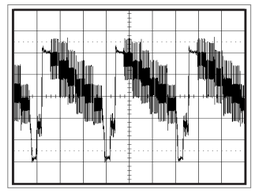

① REC/PB
0.5V 20µs/div

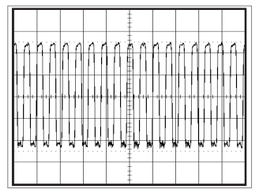

② REC/PB
100mV 0.5µs/div

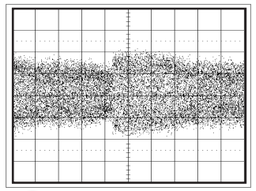

③ PB
100mV 5ms/div

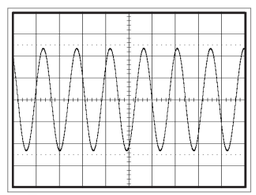

④ REC
20V 10µs/div

This schematic applies to the following model only:
TVBR2542

FROM POWER
GND
P.CON+5V
TO SHEET 19

FROM/TO IN/OUT
FRONT_A_IN_L
FRONT_VIDEO_IN
REAR_A_IN_R
REAR_VIDEO_IN
SD_VIDEO
Y/C_AUDIO
GND
TO SHEET 27

PLAYBACK VIDEO SIGNAL
TUNER VIDEO SIGNAL
AUDIO SIGNAL(REC)
AUDIO SIGNAL(PB)

FROM/TO MICRO
SP/LP/EP-H
TRICK_PB-H/EE-H
V.REC_ST_H
C_ROTARY
VCR_A_MUTE
REC/EE/PB
DUMMY_V.SYNC
CTL-
CTL+
DOC_XO_CTL
INPUT_SEL
COMP
ENV_DET
H.SW
SD_VIDEO
V.SYNC
C.SYNC
TO SHEET 21

FROM/TO CYL
CP4001_1
TOC-C04X-B1
4 SP-CH1 (R)
3 SP_COM
2 SP-CH2 (L)
1

FROM/TO HEAD AUDIO CONTROL
CP4002
52045-0645
6 AUDIO PB
5 AUDIO REC
4 CTL+
3 CTL-
2 AE HEAD(-)
1 AE HEAD(+)

TO FULL ERASE HEAD
CP4003
TMC-T02X-E1
2 FE HEAD(GND)
1 FE HEAD(HOT)

FROM/TO CHROMA
Y/C_AUDIO
TU_AUDIO
TU_VIDEO
CHROMA_VIDEO
TO SHEET 22

25" Audio Amp Circuit

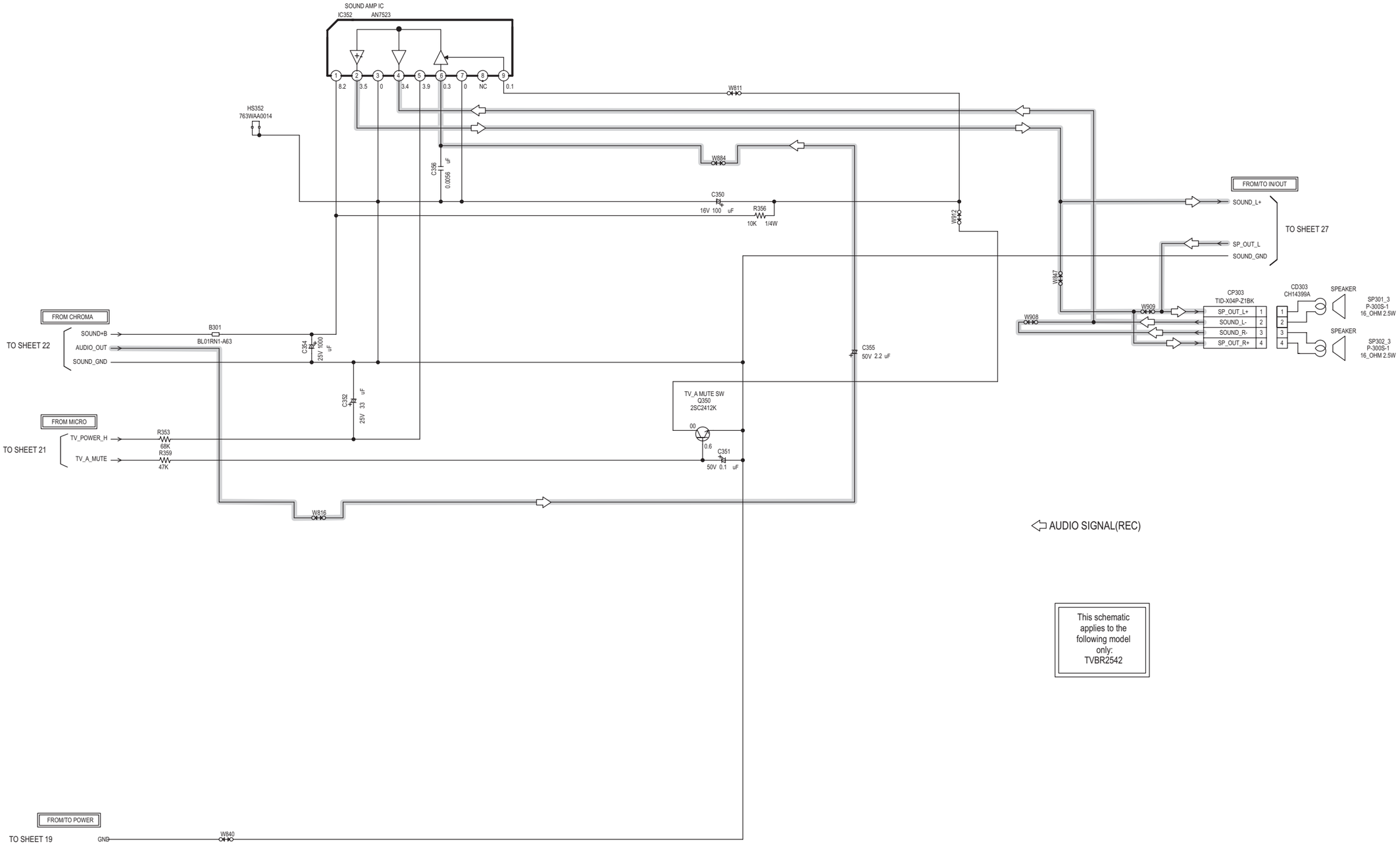

25" CRT Circuit

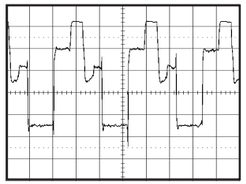

⑲ 20.0V 20µs/div

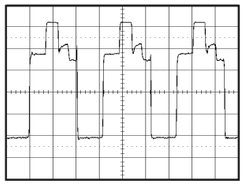

⑳ 20.0V 20µs/div

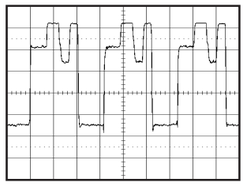

㉑ 20.0V 20µs/div

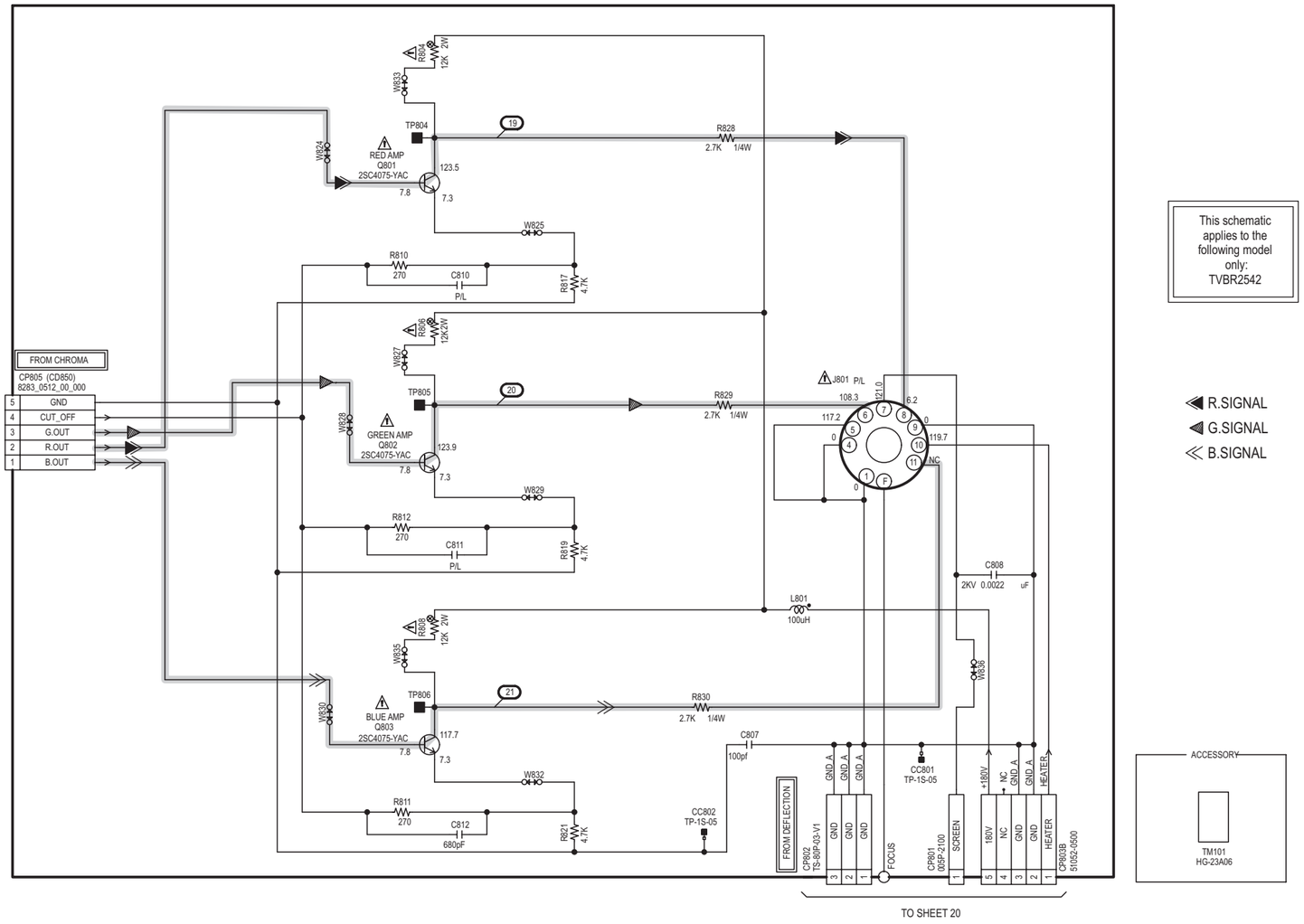

This schematic applies to the following model only:
TVBR2542

25" Deck Circuit

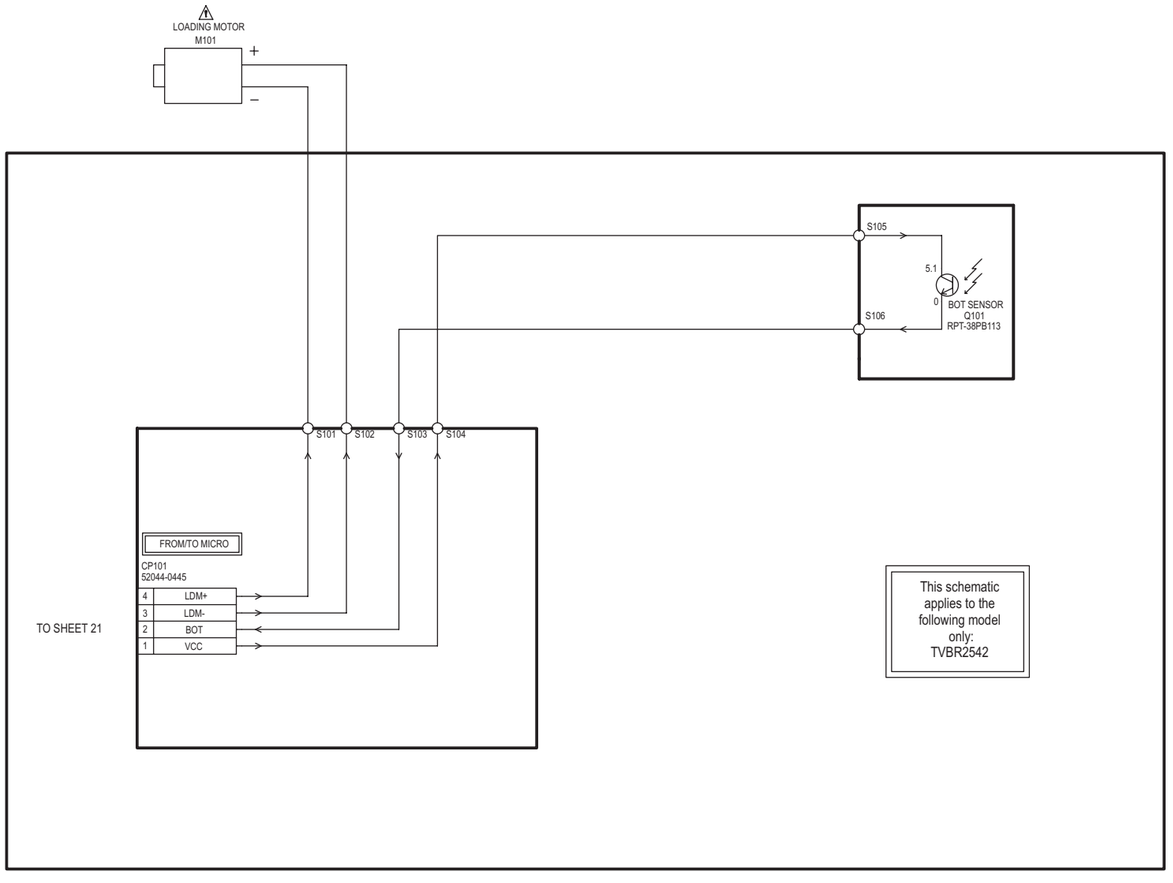

25" Input/Output Circuit

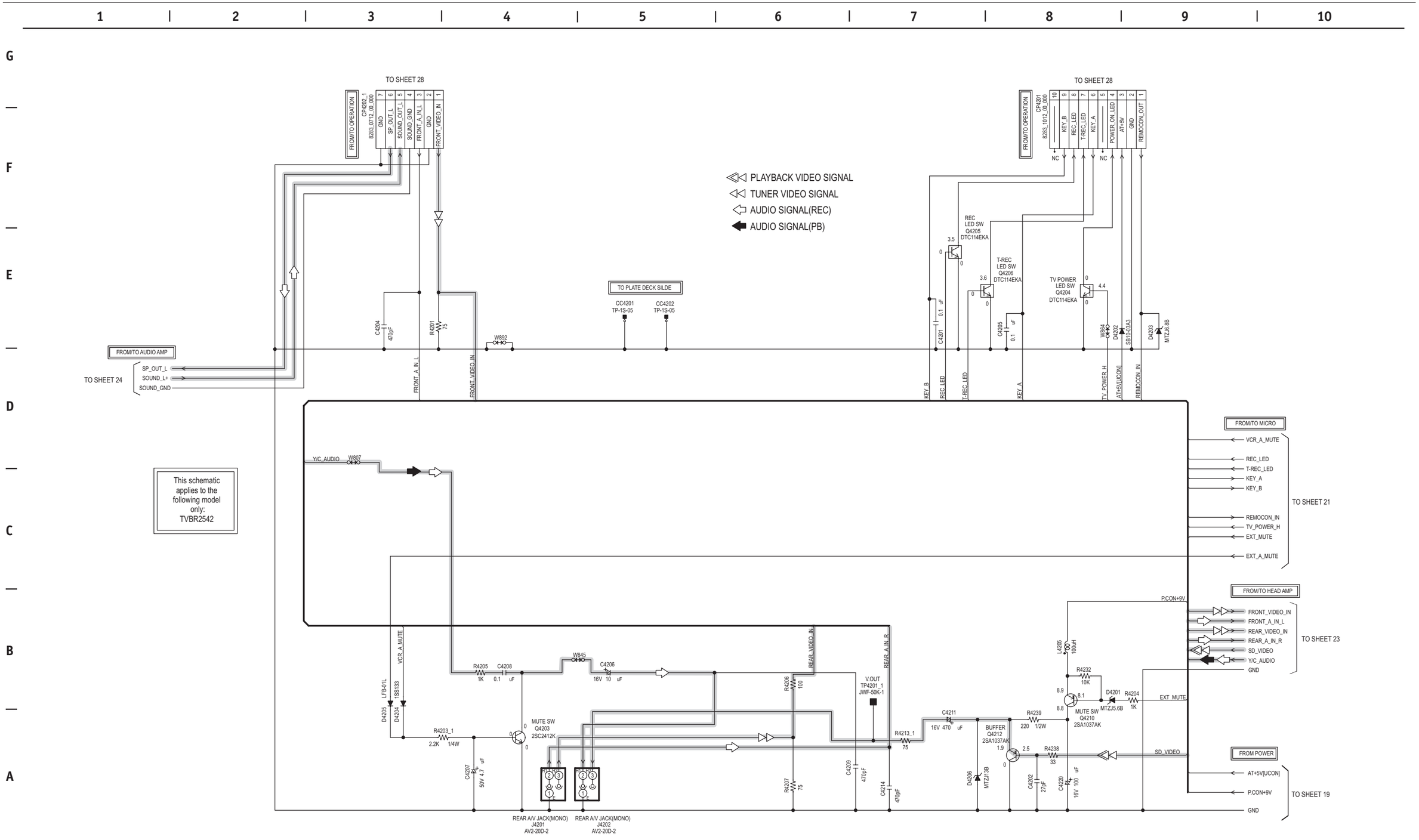

25" Control Panel Circuit

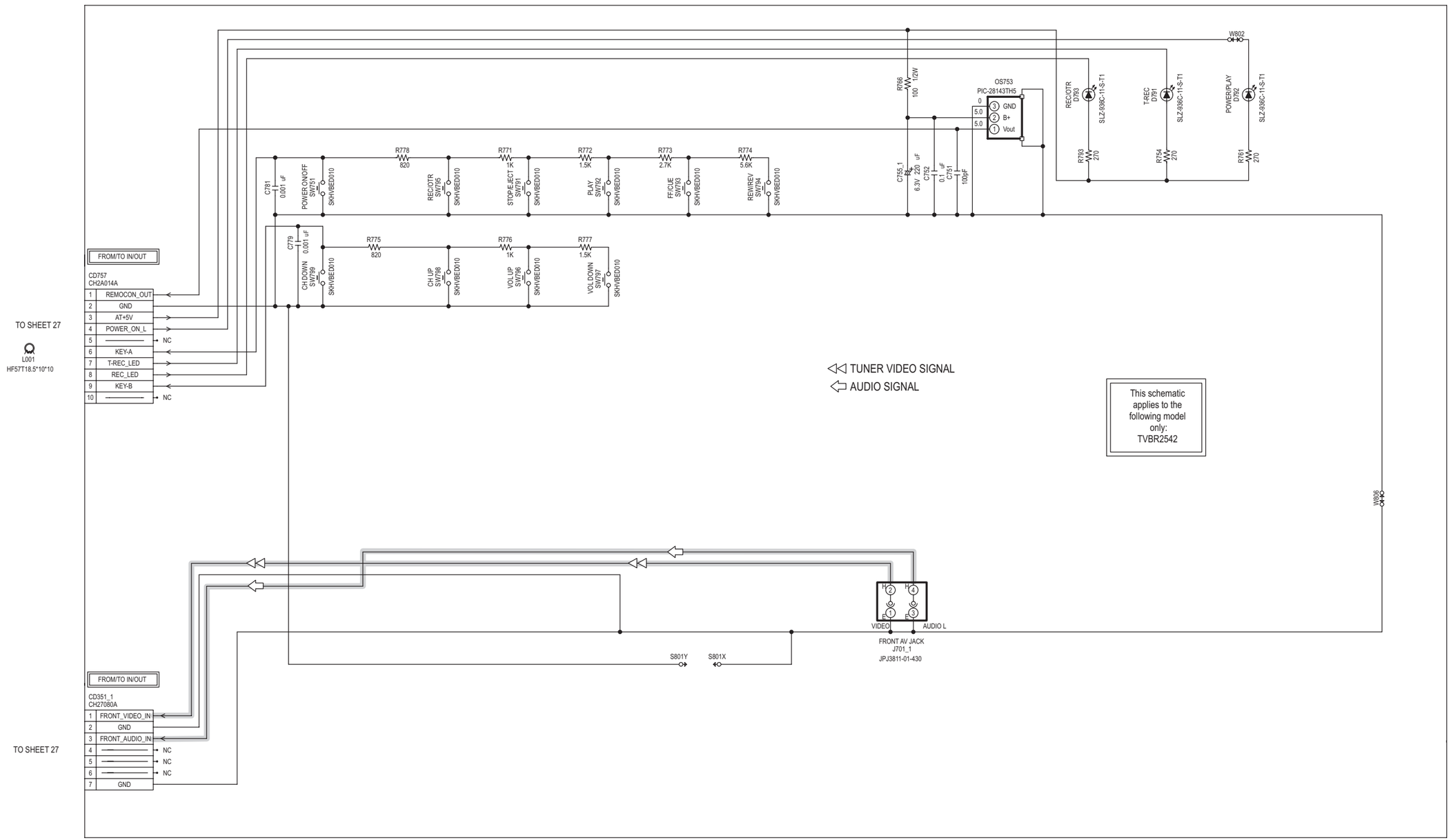

13/19" Main PCB Top Layout

1 | 2 | 3 | 4 | 5 | 6 | 7 | 8 | 9 | 10

G

F

E

D

C

B

A

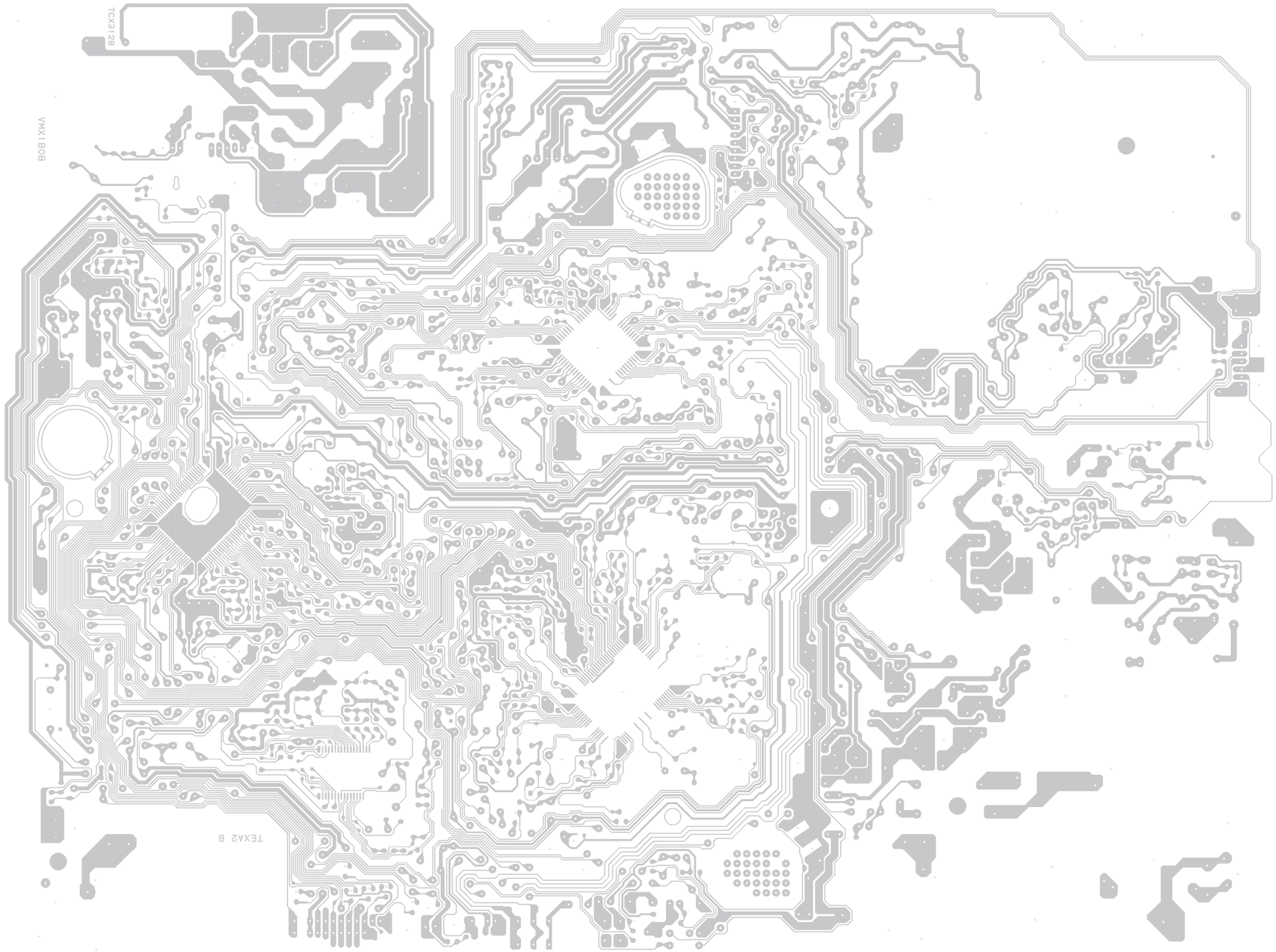

13/19" Main PCB Bottom Layout

1 | 2 | 3 | 4 | 5 | 6 | 7 | 8 | 9 | 10

G — F — E — D — C — B — A

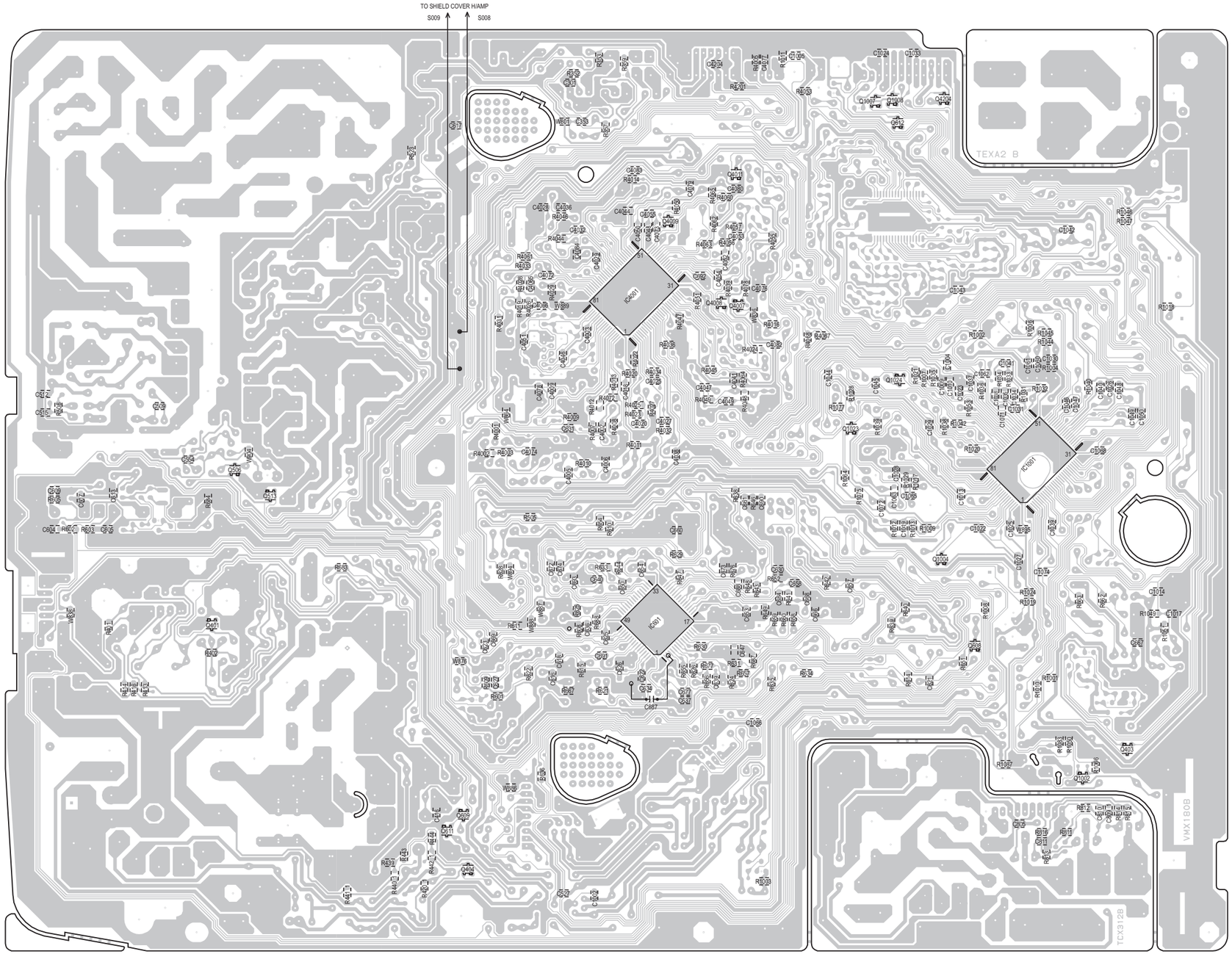

CRITICAL SAFETY COMPONENTS ARE IDENTIFIED BY THE SYMBOL ⚠.
REPLACE ONLY WITH PART NUMBERS SPECIFIED.

P/L = See parts list for part description PROV = Provisional

13/19" Control Panel & Deck PCB Layout

1 | 2 | 3 | 4 | 5 | 6 | 7 | 8 | 9 | 10

G

F

CONTROL PANEL

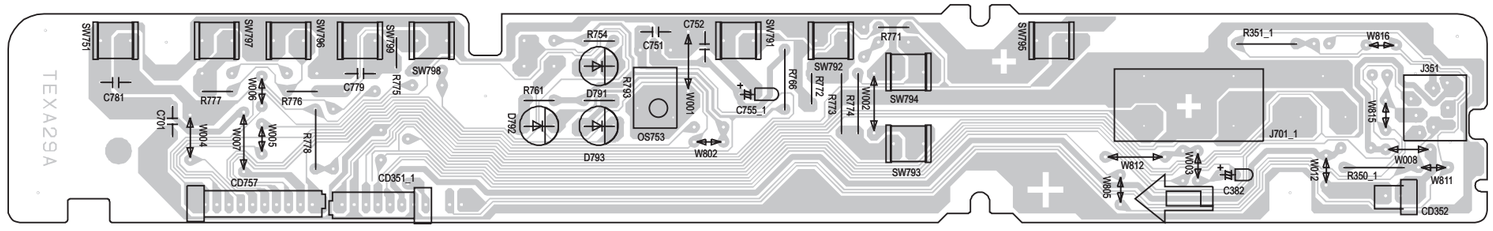

E

D

C

B

DECK

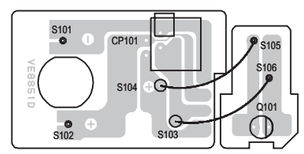

A

25" Main PCB Layout

1 | 2 | 3 | 4 | 5 | 6 | 7 | 8 | 9 | 10

G

F

E

D

C

B

A

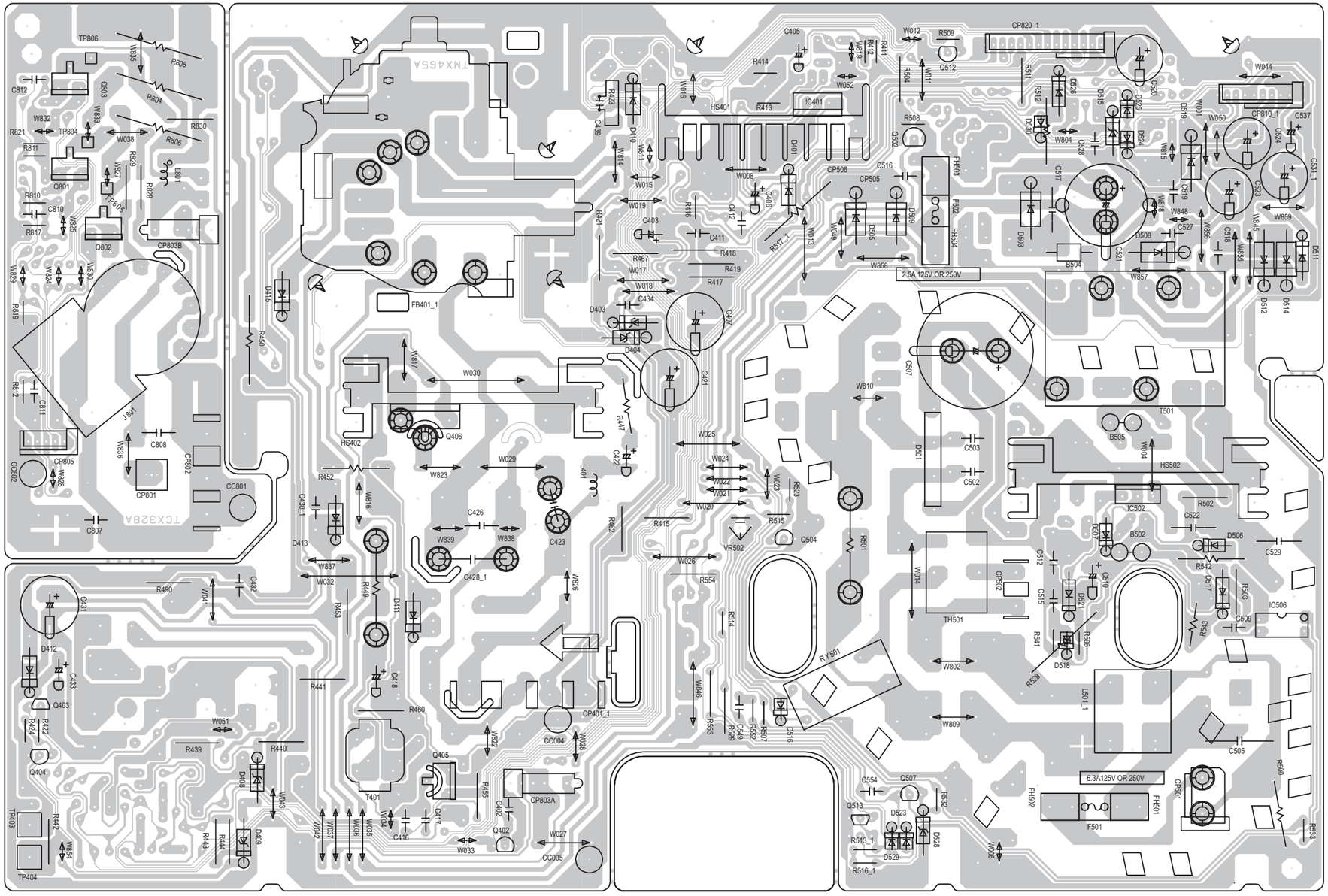

25" System Control PCB Top Layout

1 | 2 | 3 | 4 | 5 | 6 | 7 | 8 | 9 | 10

G

F

E

D

C

B

A

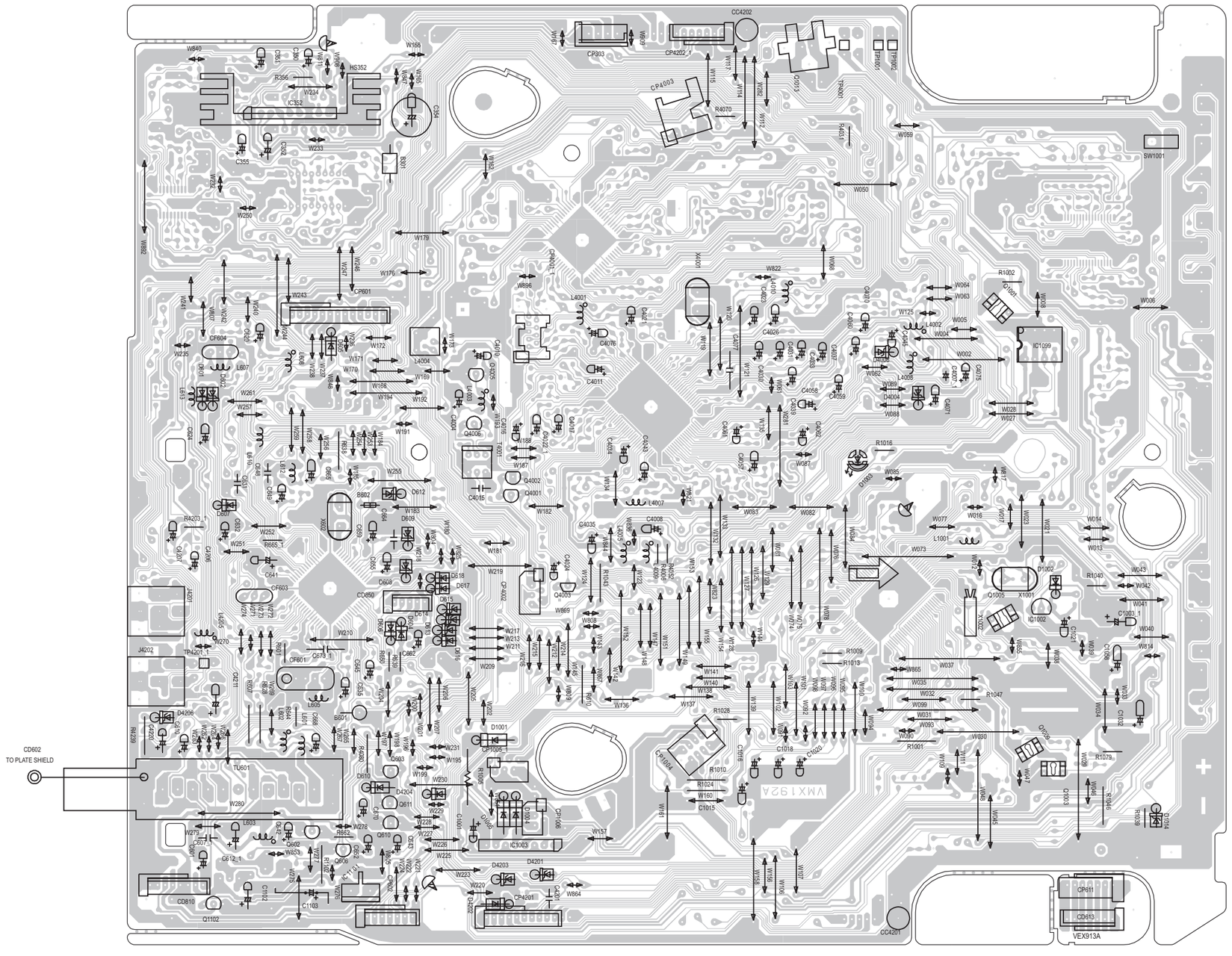

CRITICAL SAFETY COMPONENTS ARE IDENTIFIED BY THE SYMBOL ⚠.
REPLACE ONLY WITH PART NUMBERS SPECIFIED.

P/L = See parts list for part description PROV = Provisional

25" System Control PCB Bottom Layout

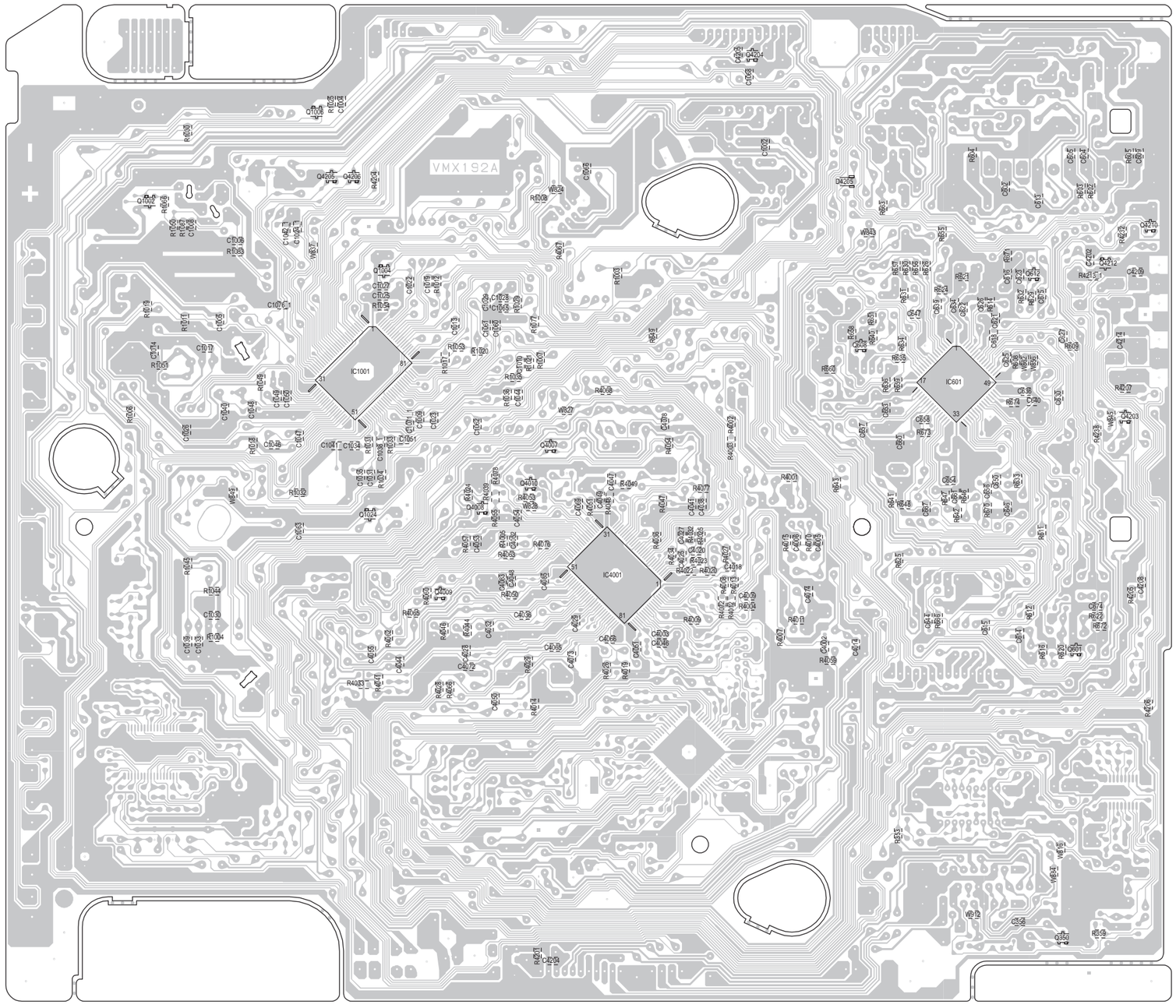

CRITICAL SAFETY COMPONENTS ARE IDENTIFIED BY THE SYMBOL ⚠.
REPLACE ONLY WITH PART NUMBERS SPECIFIED.

P/L = See parts list for part description PROV = Provisional